PSI SYSTEM 312-310	MIDWALL PANEL JOINTS	01

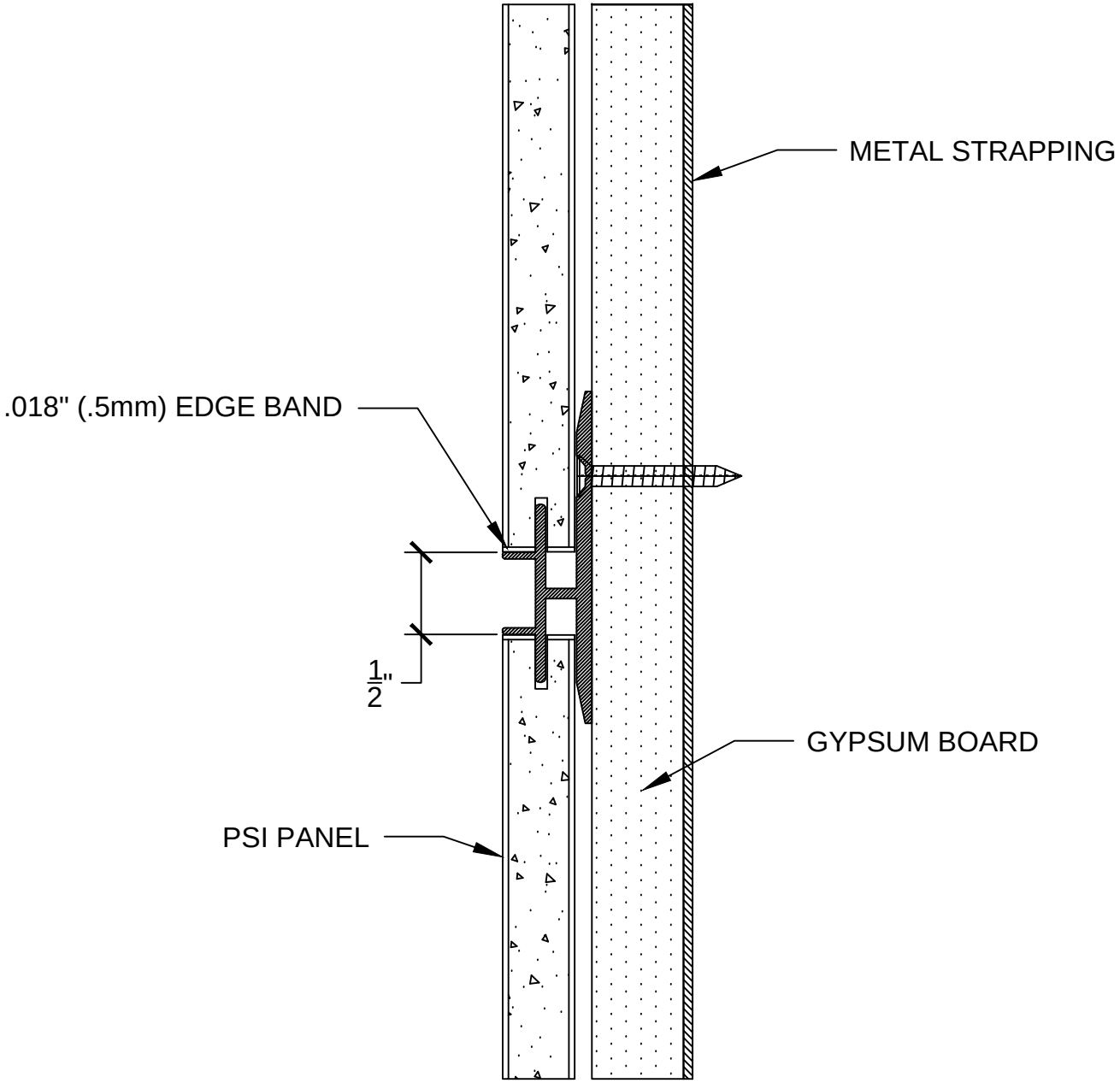

#312 HORIZONTAL REVEAL / DIVIDER

RIGHT SIDE VIEW

PSI SYSTEM 312-310	MIDWALL PANEL JOINTS	01

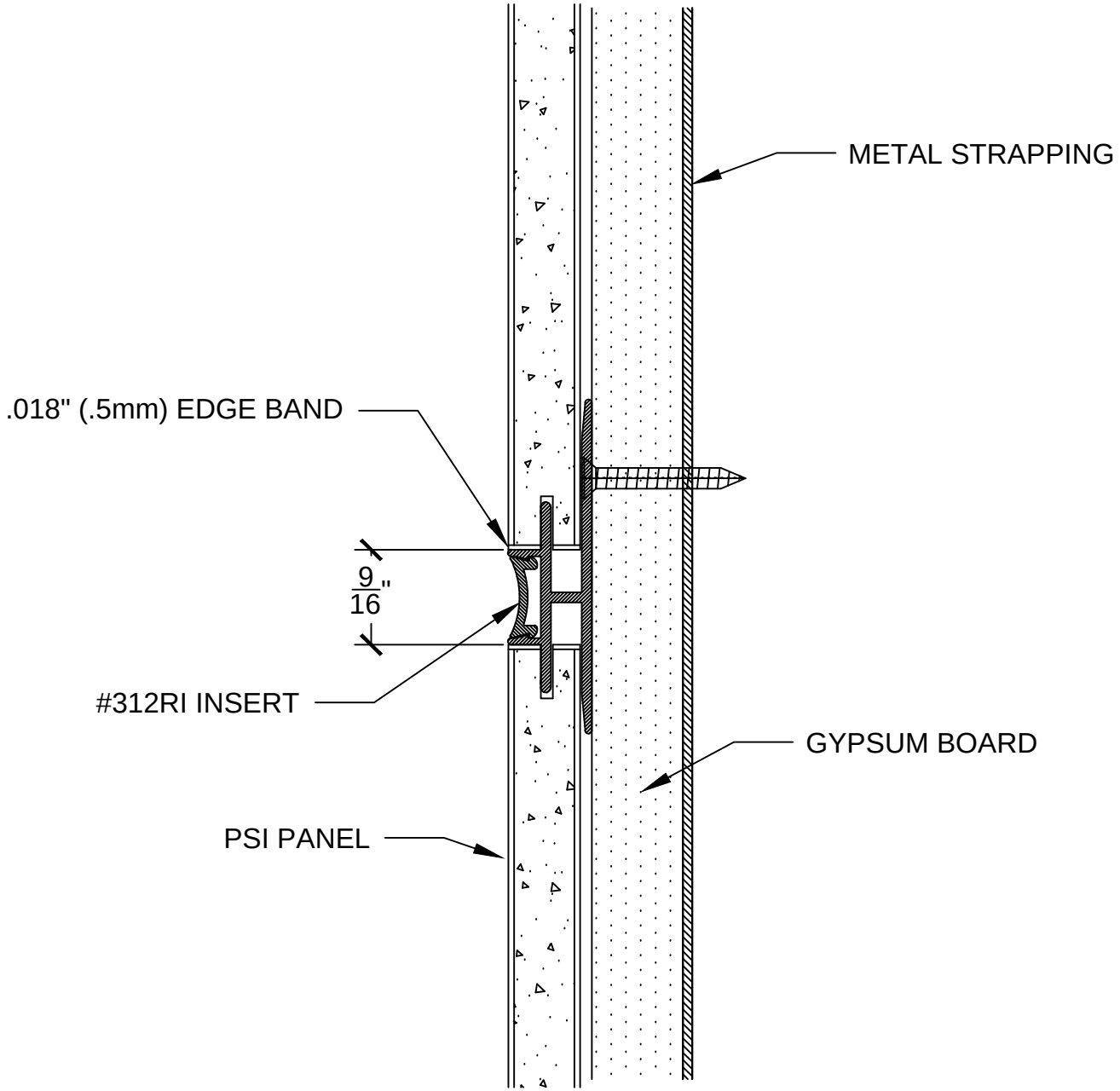

#312 HORIZONTAL REVEAL / DIVIDER	RIGHT SIDE VIEW

PSI SYSTEM 312-310	MIDWALL PANEL JOINTS	01

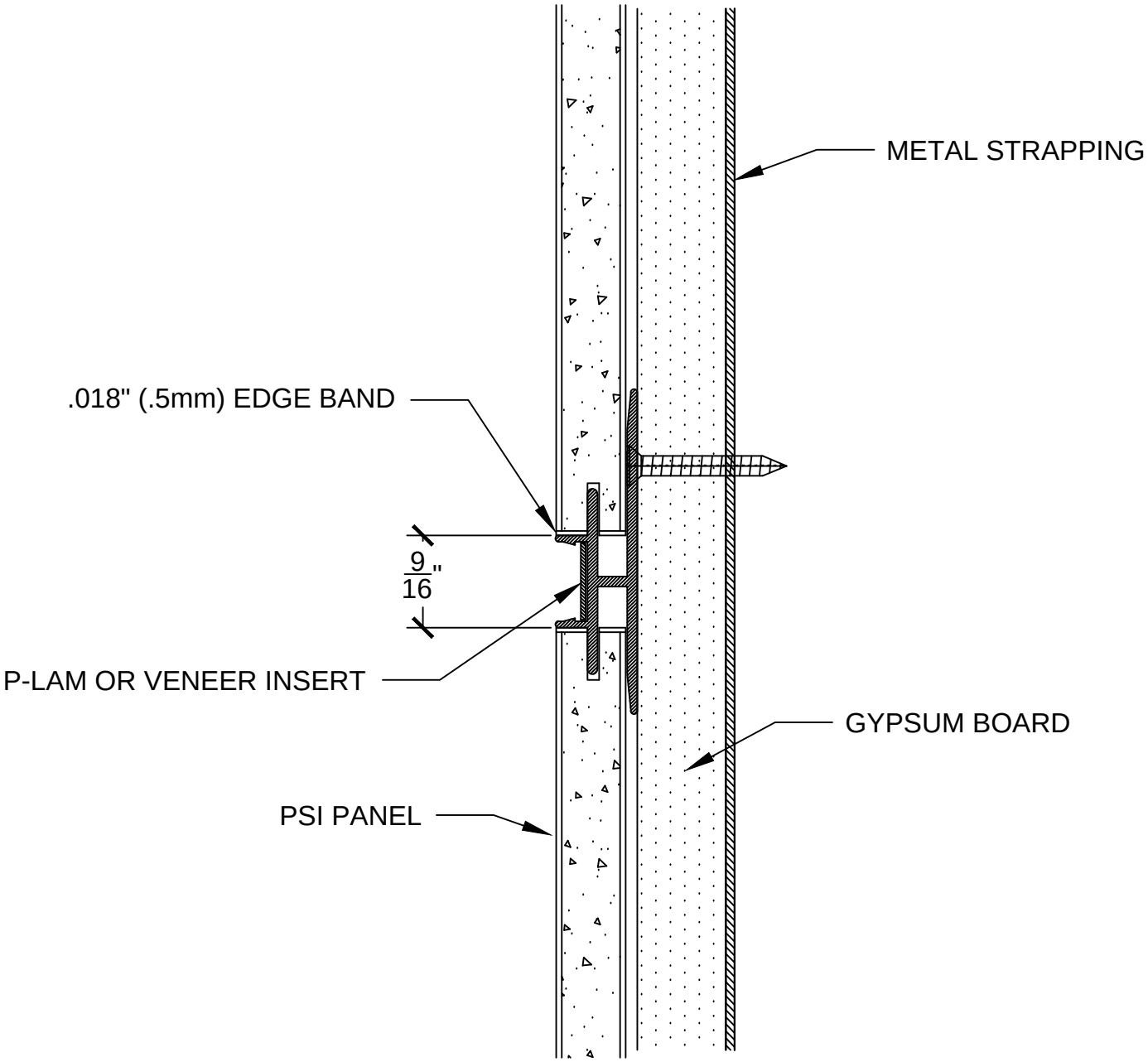

#312 HORIZONTAL REVEAL / DIVIDER

RIGHT SIDE VIEW

PSI SYSTEM 312-310	MIDWALL PANEL JOINTS	01

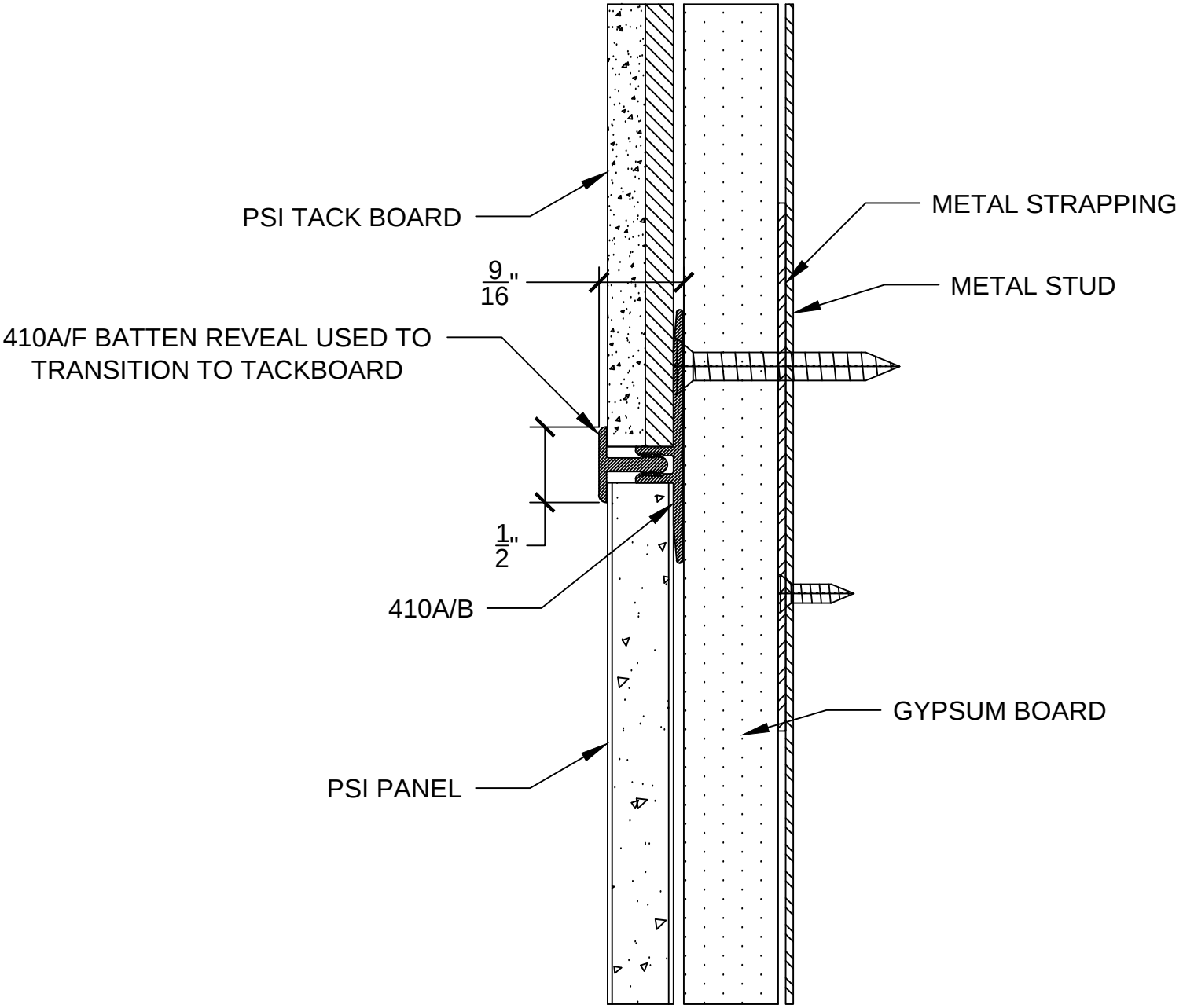

#410A HORIZONTAL BATTEN / DIVIDER	RIGHT SIDE VIEW

PSI SYSTEM 312-310	MIDWALL PANEL JOINTS	02

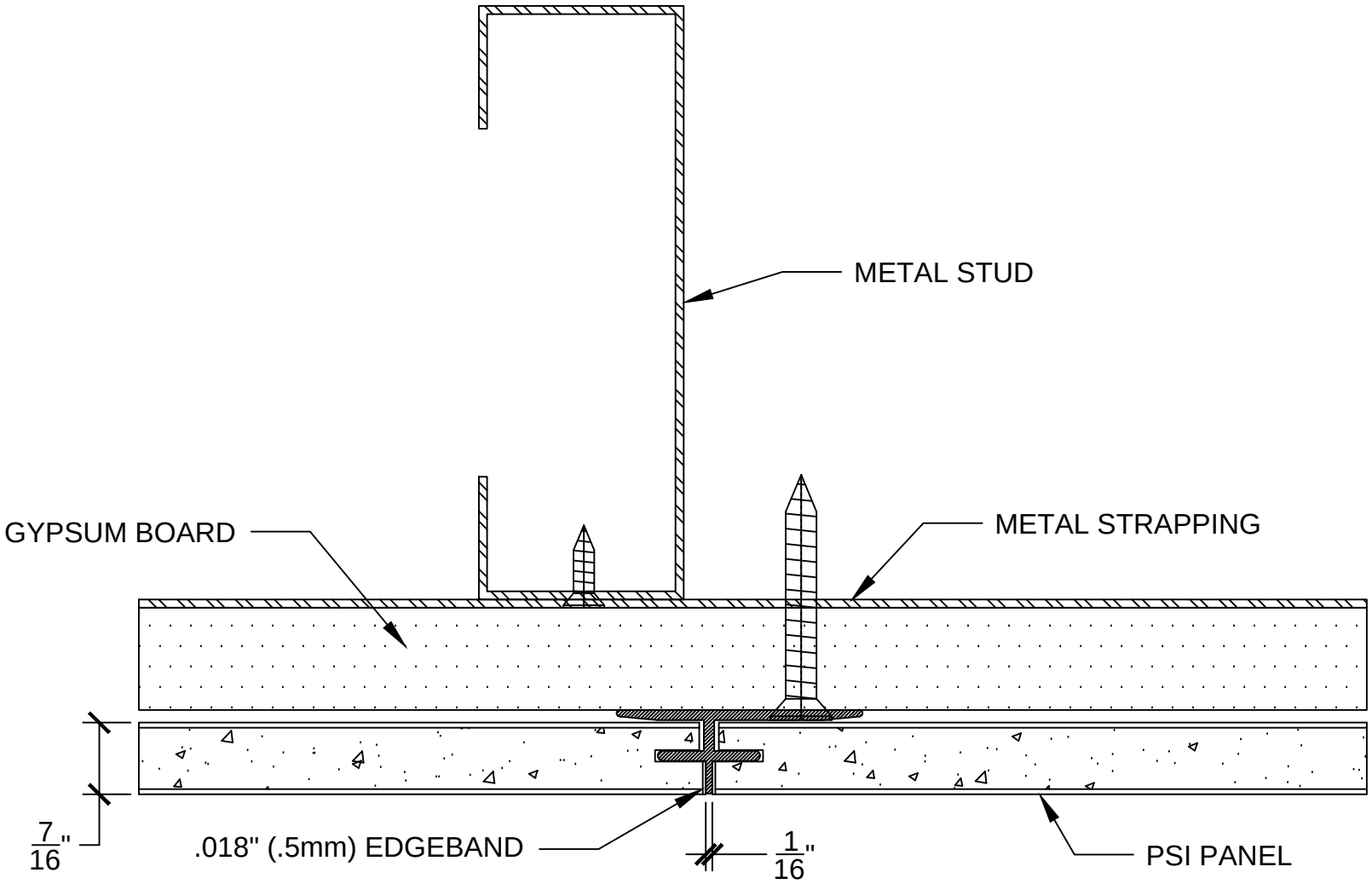

#302A VERTICAL REVEAL / DIVIDER

TOP VIEW

PSI SYSTEM 312-310	PERIMETER TRIM	03

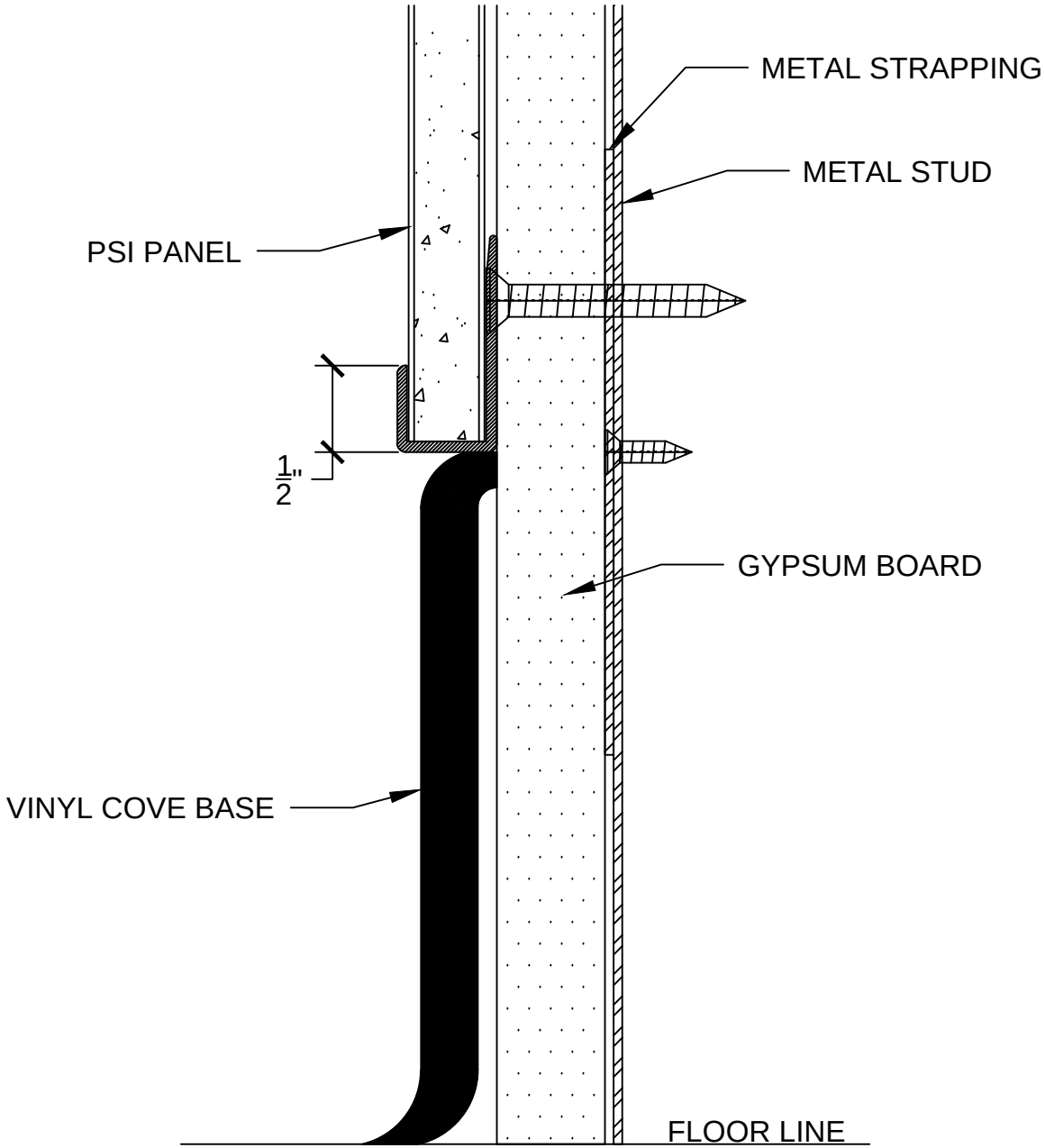

#304 HORIZONTAL TRIM - ABOVE BASE

RIGHT SIDE VIEW

PSI SYSTEM 312-310	PERIMETER TRIM	03

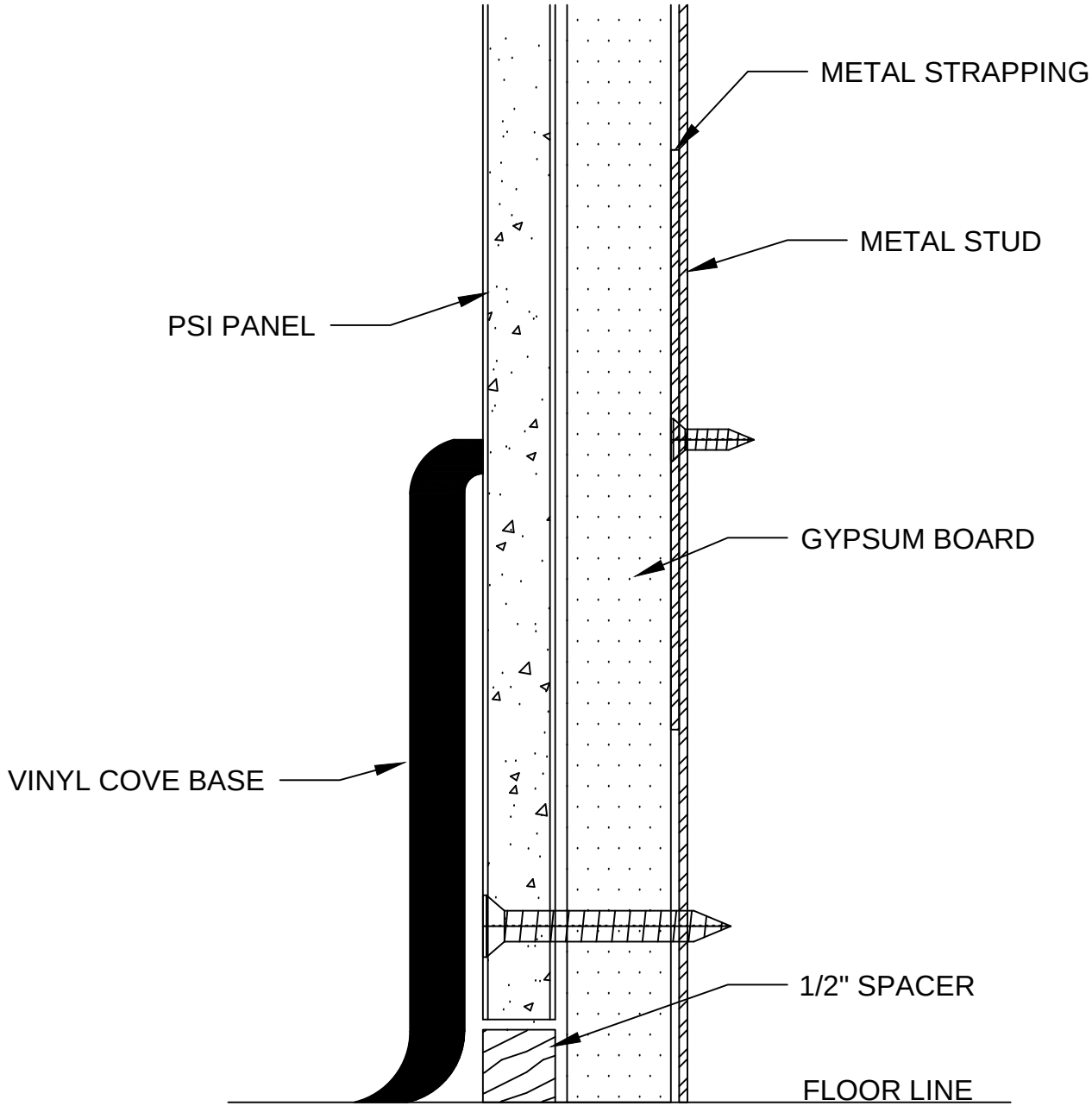

ALTERNATE - BEHIND BASE

RIGHT SIDE VIEW

PSI SYSTEM 312-310	OPTIONAL PERIMETER TRIM	03

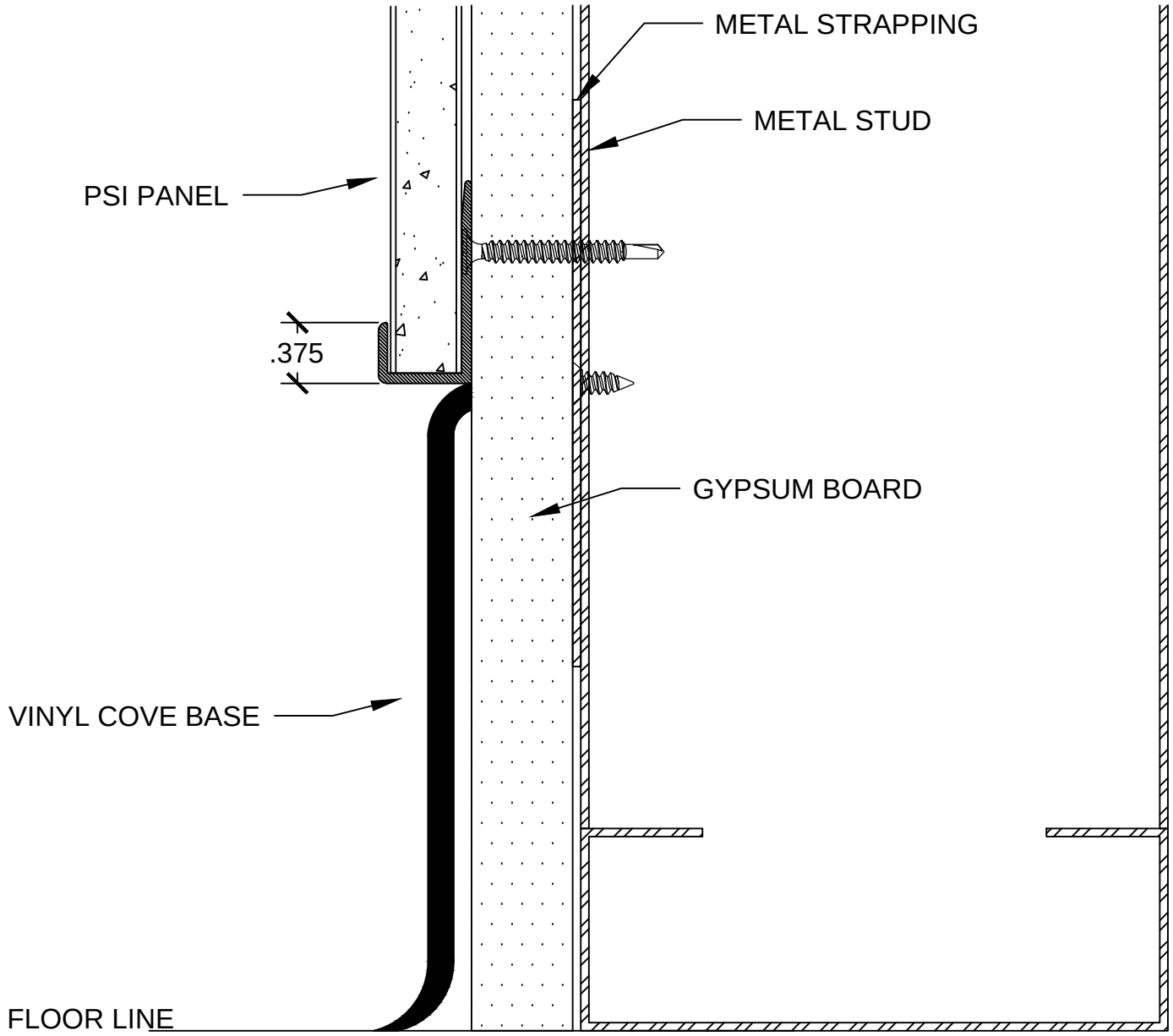

#604 HORIZONTAL TRIM - ABOVE BASE

RIGHT SIDE VIEW

PSI SYSTEM 312-310	PERIMETER TRIM	04

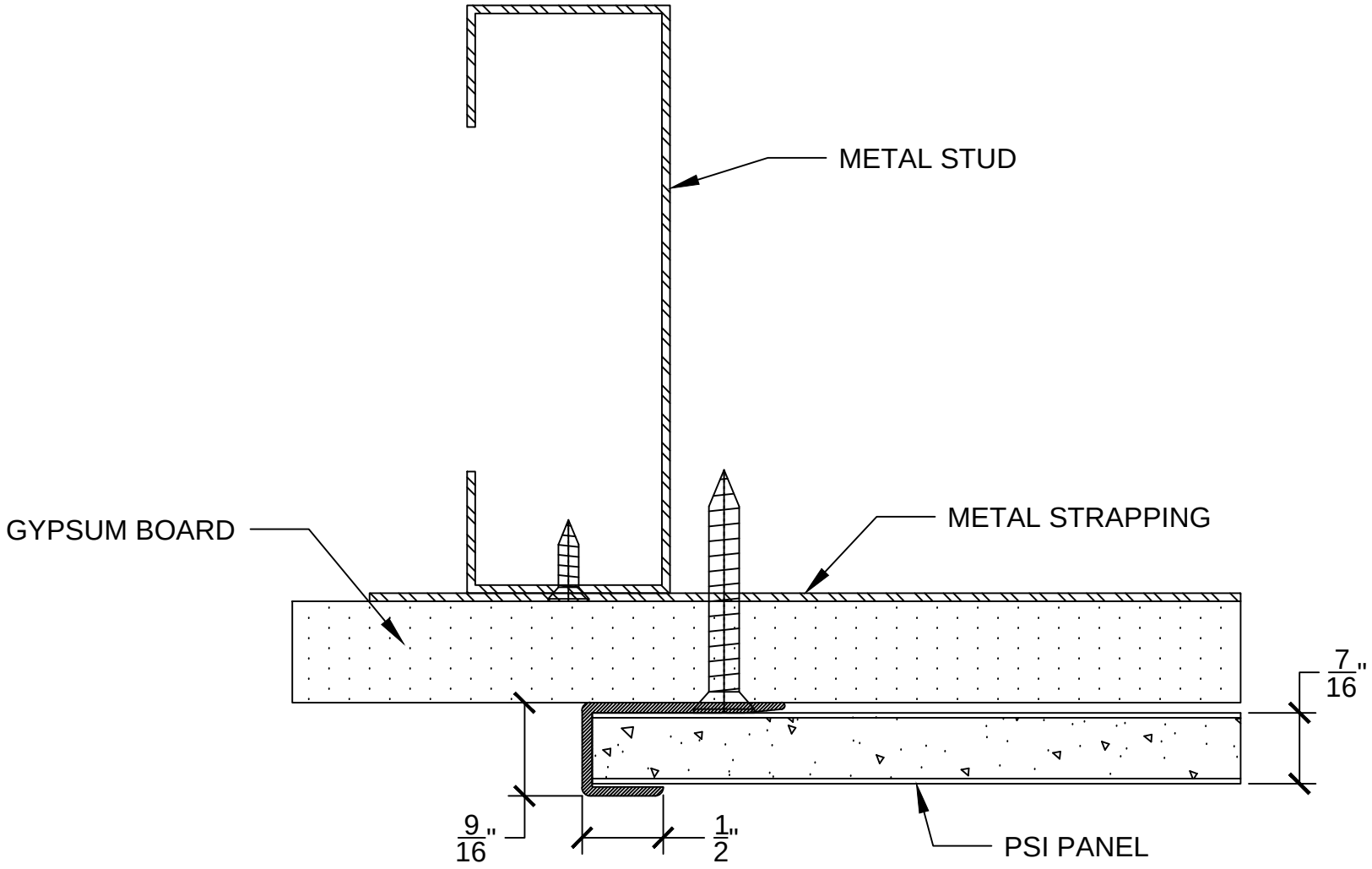

#304 VERTICAL EDGE TRIM	TOP VIEW

PSI SYSTEM 312-310	PERIMETER TRIM	04

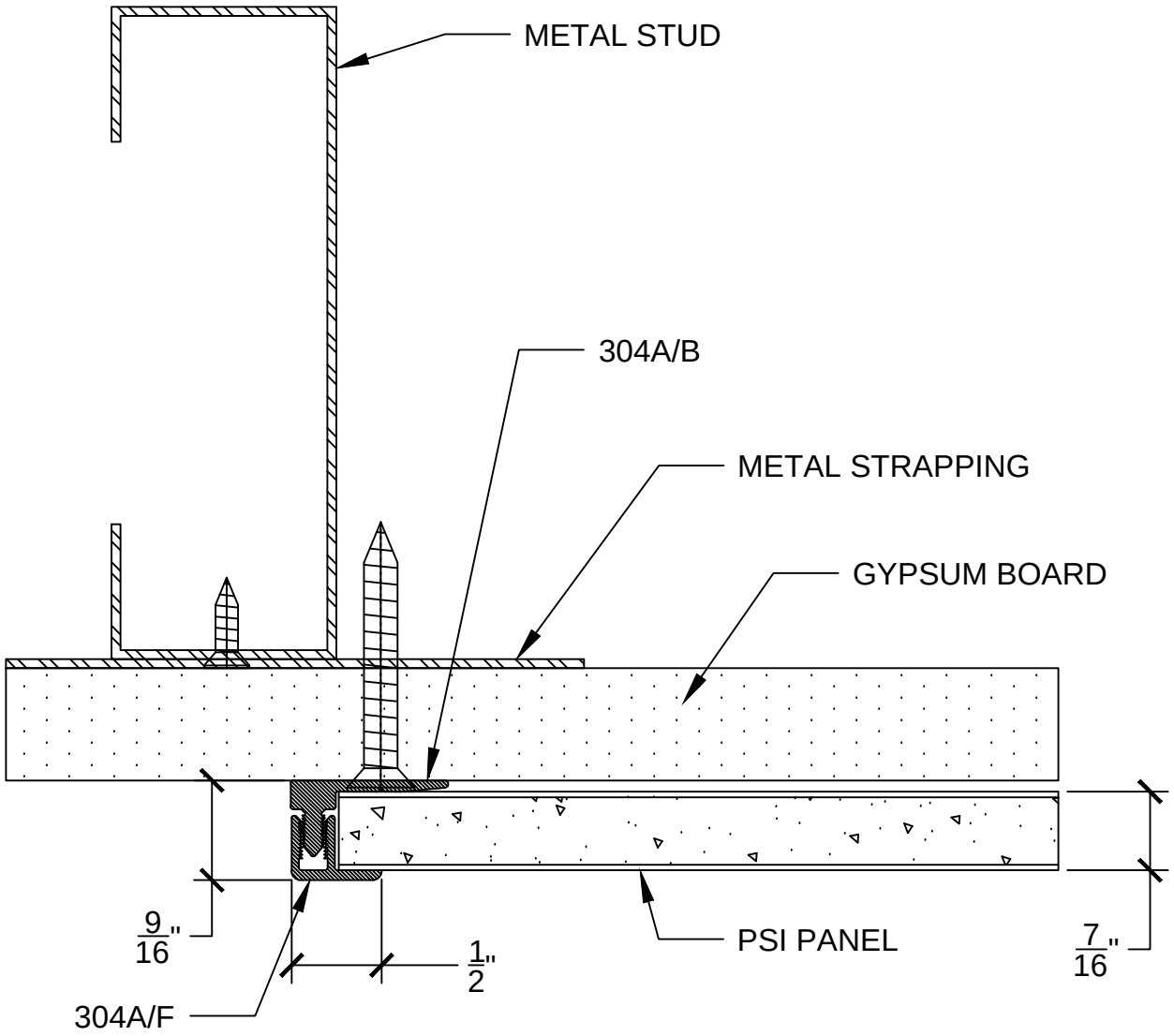

#304A VERTICAL EDGE TRIM

TOP VIEW

PSI SYSTEM 312-310	PERIMETER TRIM	04

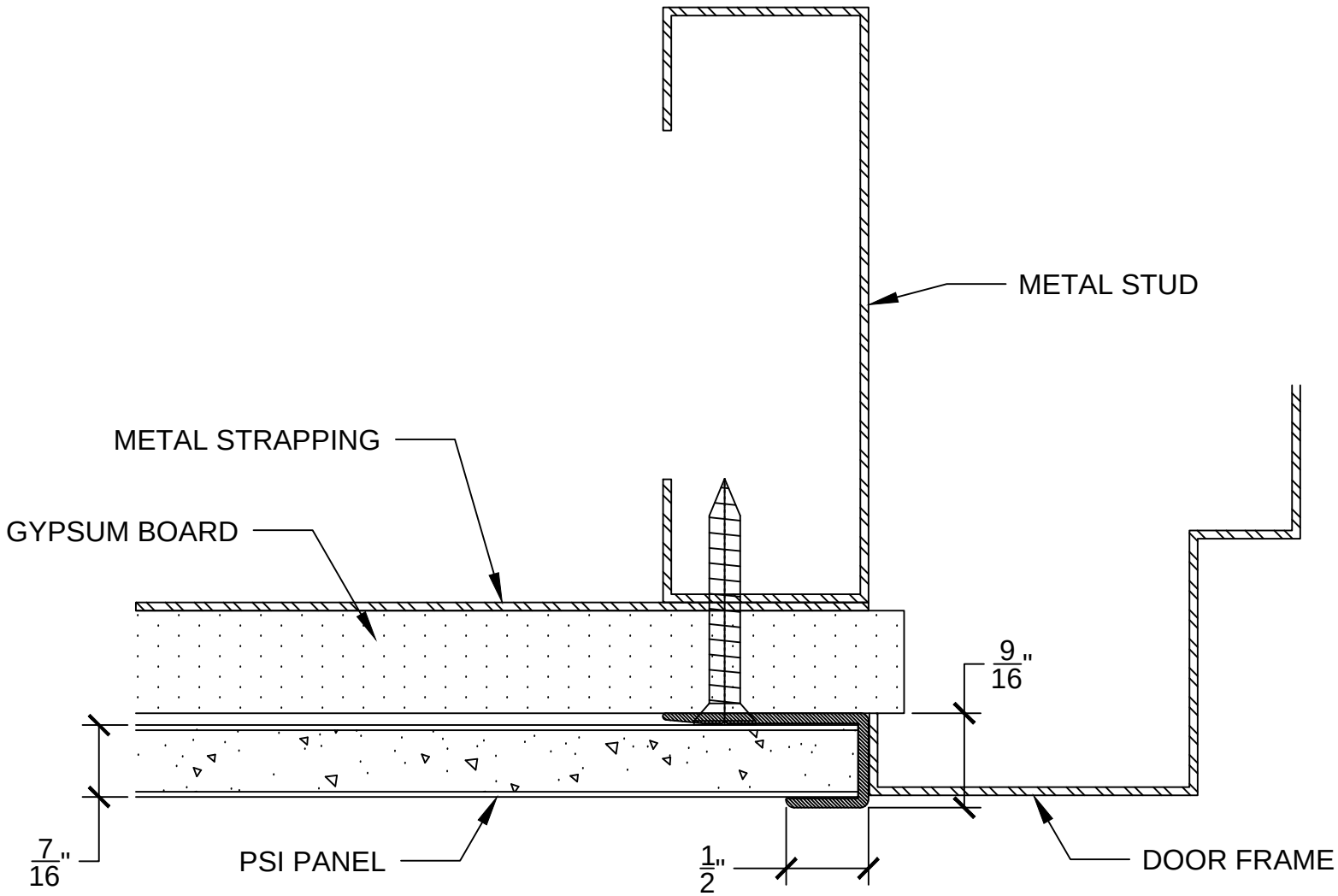

#304 EDGE TRIM @ DOOR OR WINDOW FRAME

TOP VIEW

PSI SYSTEM 312-310	PERIMETER TRIM	04

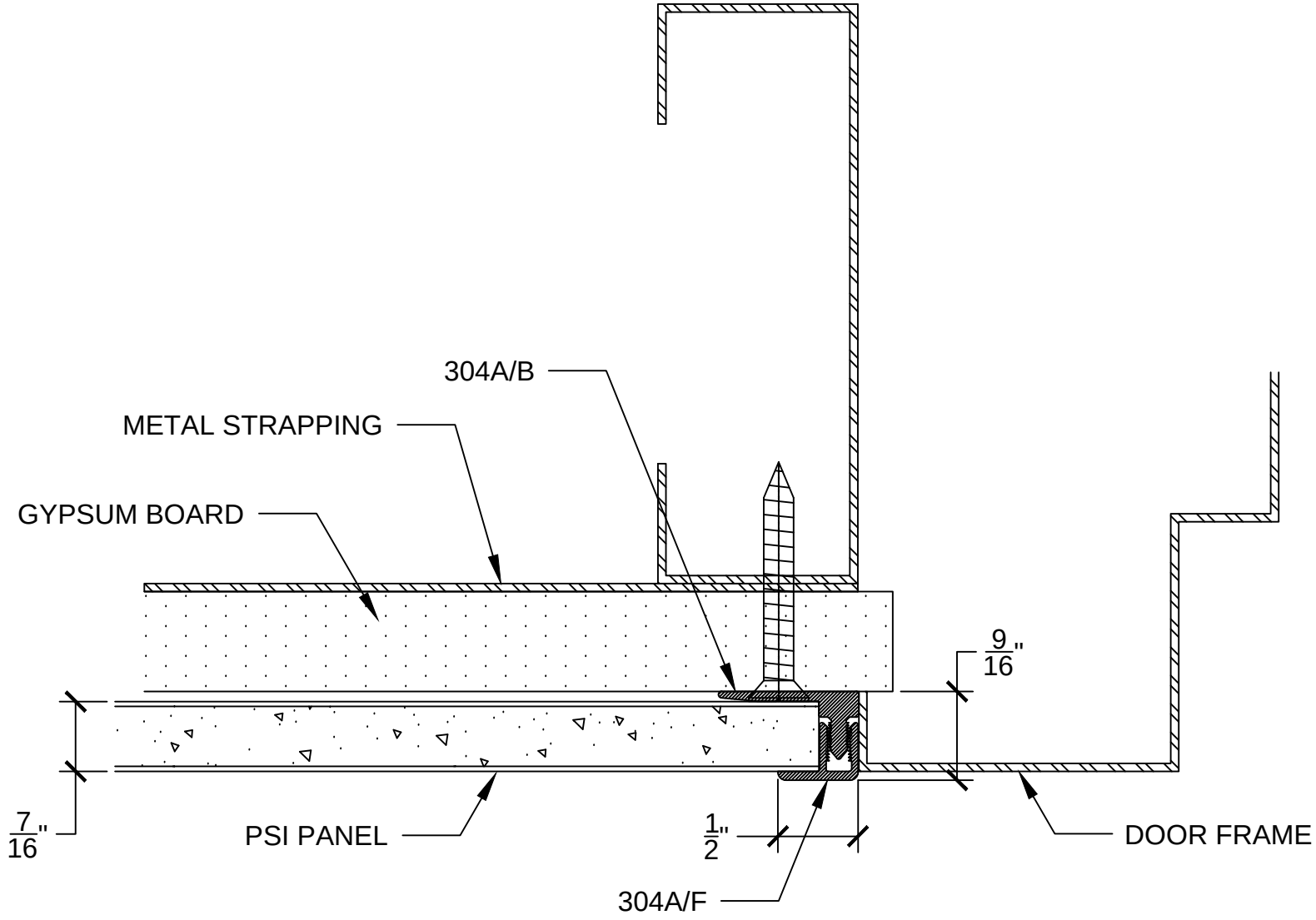

#304A EDGE TRIM @ DOOR OR WINDOW FRAME TOP VIEW

PSI SYSTEM 312-310	OPTIONAL PERIMETER TRIM	04

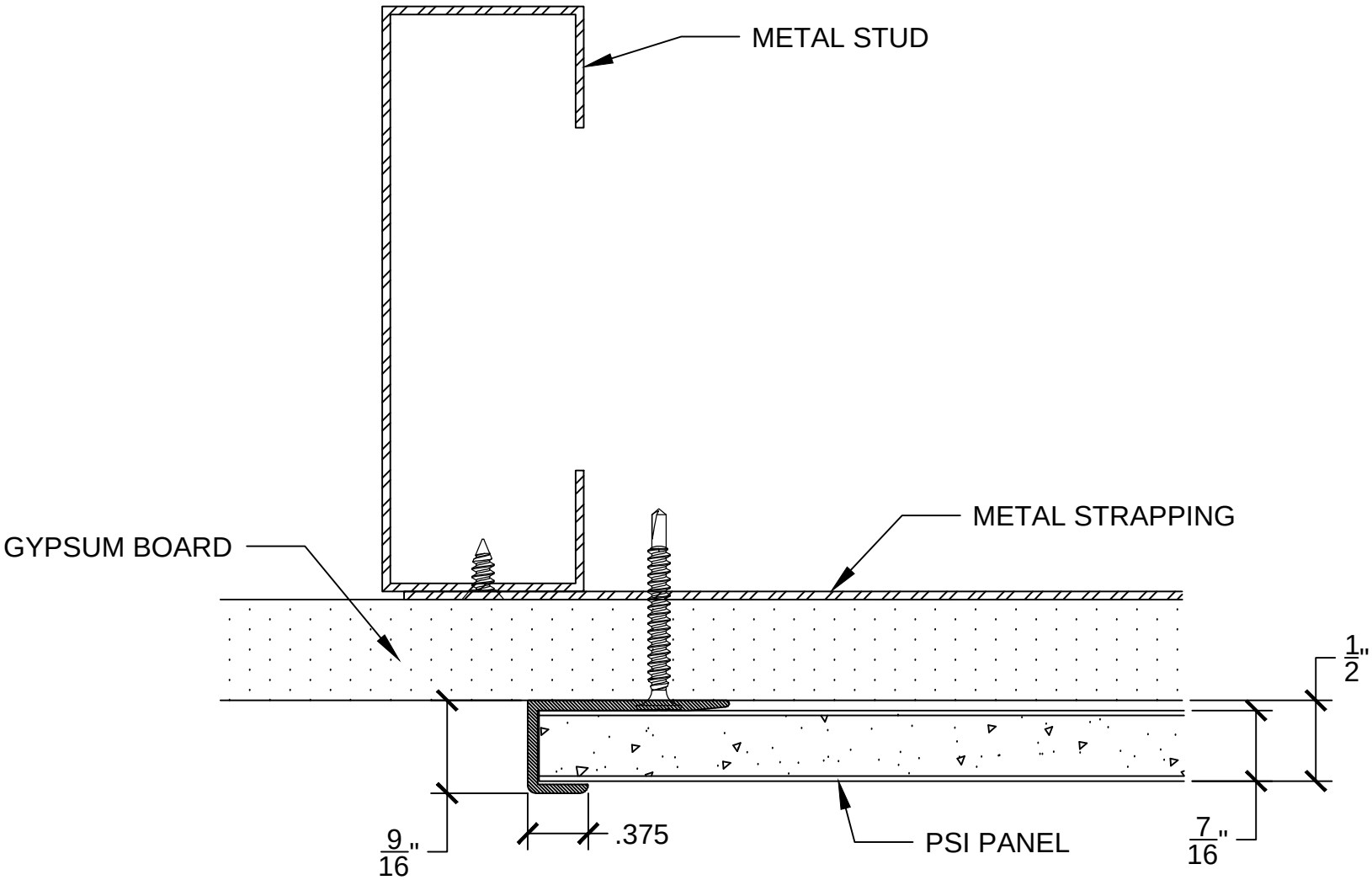

#604 VERTICAL EDGE TRIM

TOP VIEW

PSI SYSTEM 312-310	OPTIONAL PERIMETER TRIM	04

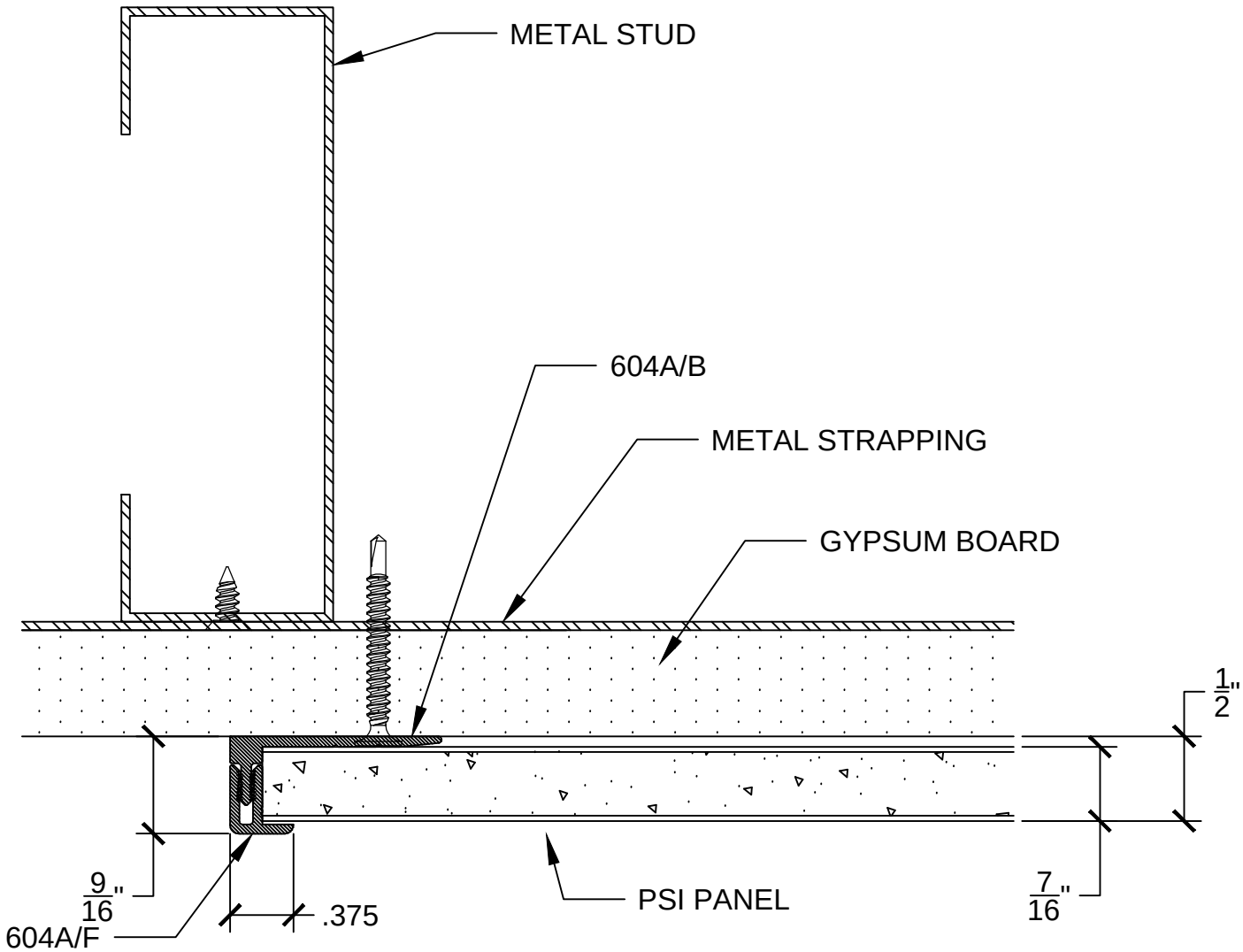

#604A VERTICAL EDGE TRIM

TOP VIEW

PSI SYSTEM 312-310	OPTIONAL PERIMETER TRIM	04

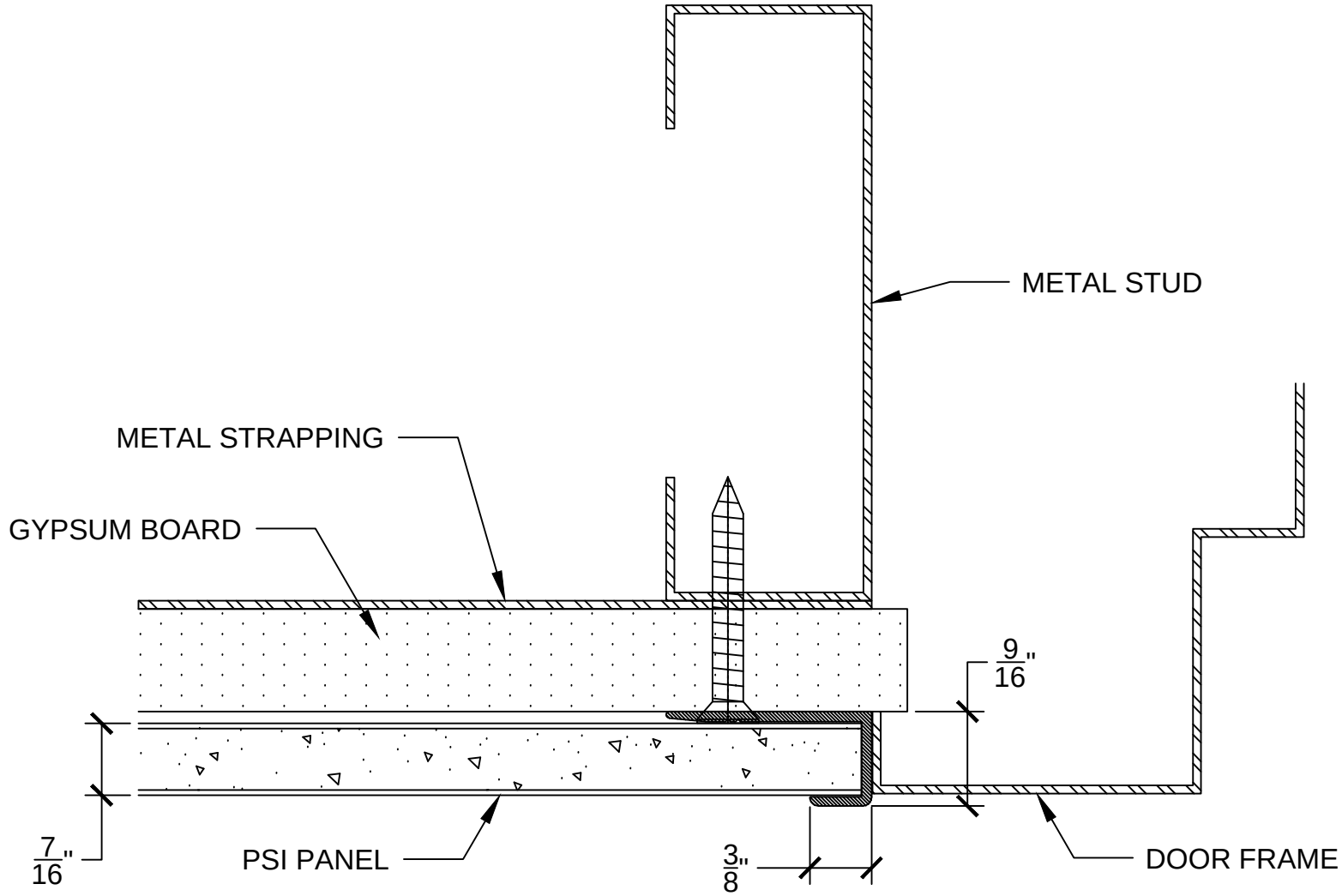

#604 EDGE TRIM @ DOOR OR WINDOW FRAME

TOP VIEW

PSI SYSTEM 312-310	OPTIONAL PERIMETER TRIM	04

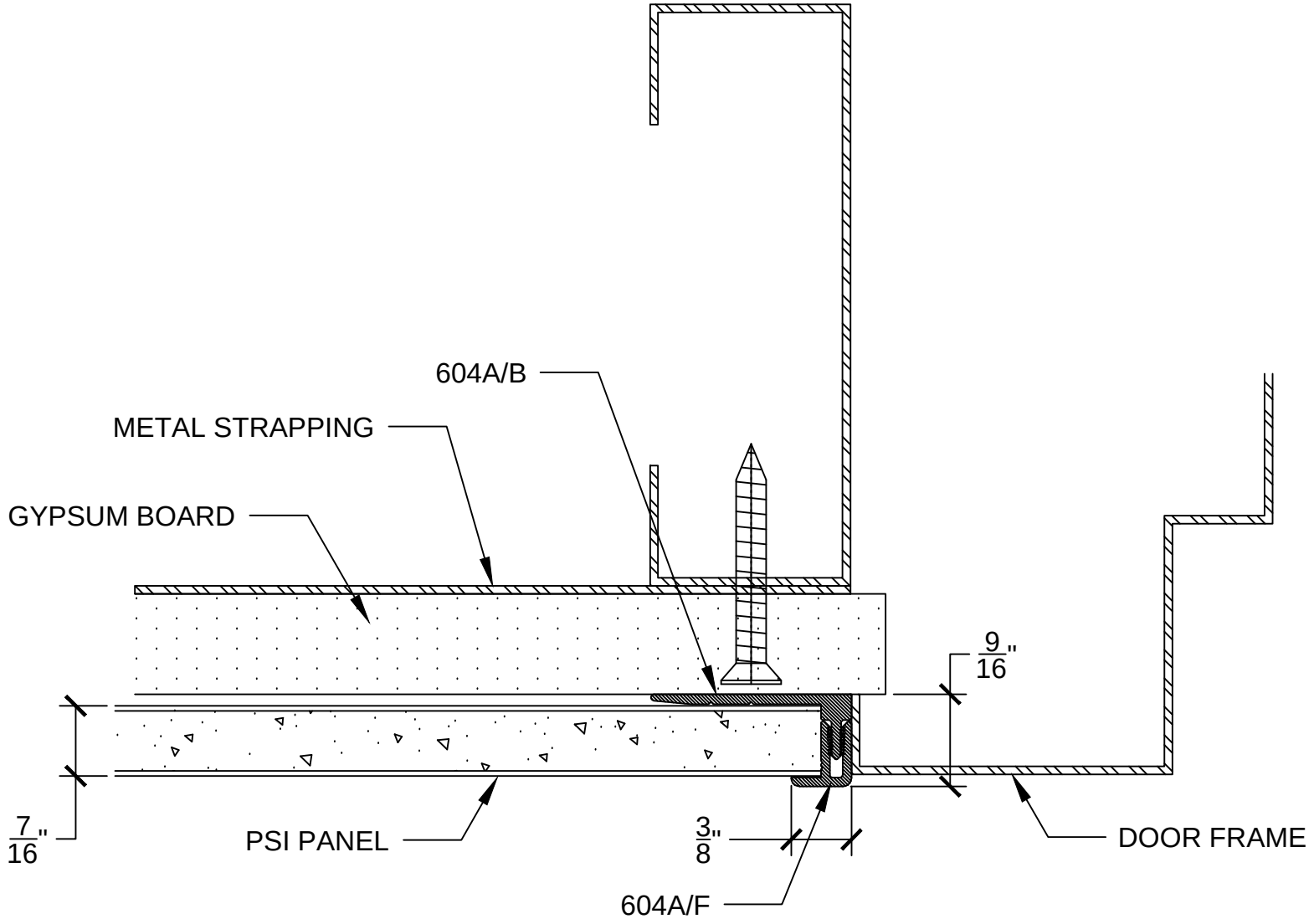

#604A EDGE TRIM @ DOOR OR WINDOW FRAME TOP VIEW

PSI SYSTEM 312-310	PERIMETER TRIM	05

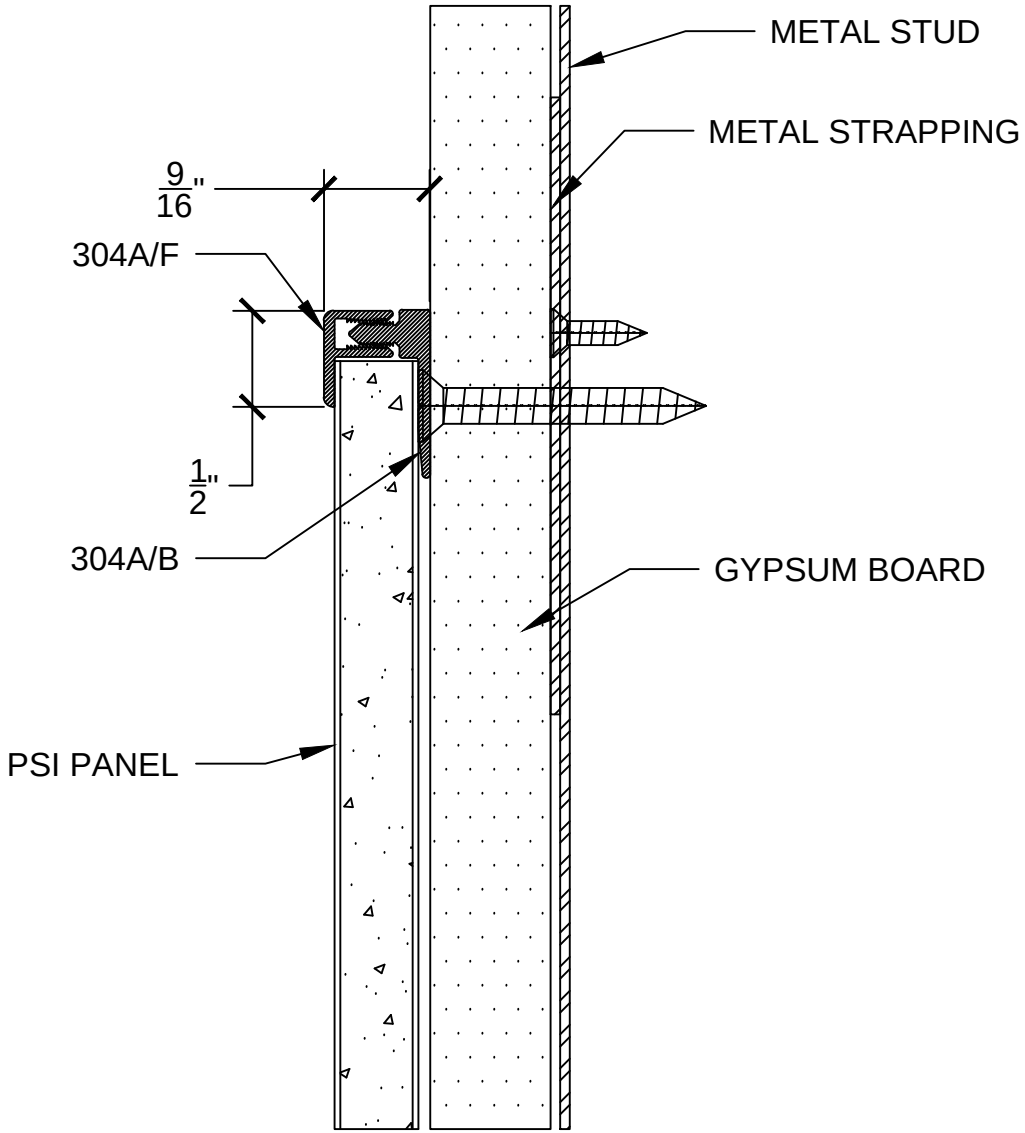

#304A TOP TRIM	RIGHT SIDE VIEW

PSI SYSTEM 312-310	OPTIONAL PERIMETER TRIM	05

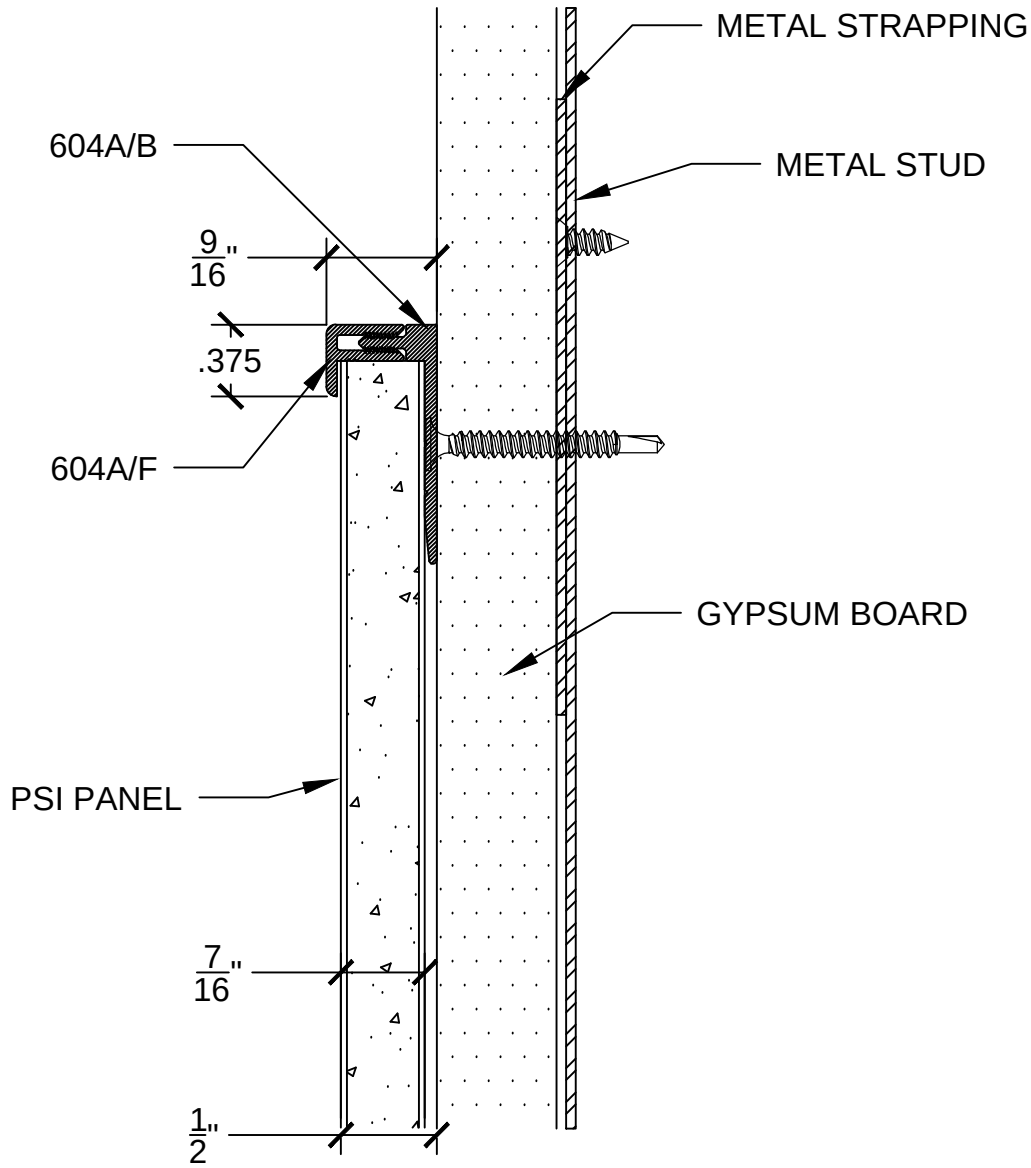

#604A TOP TRIM

RIGHT SIDE VIEW

PSI SYSTEM 312-310	PERIMETER TRIM	06

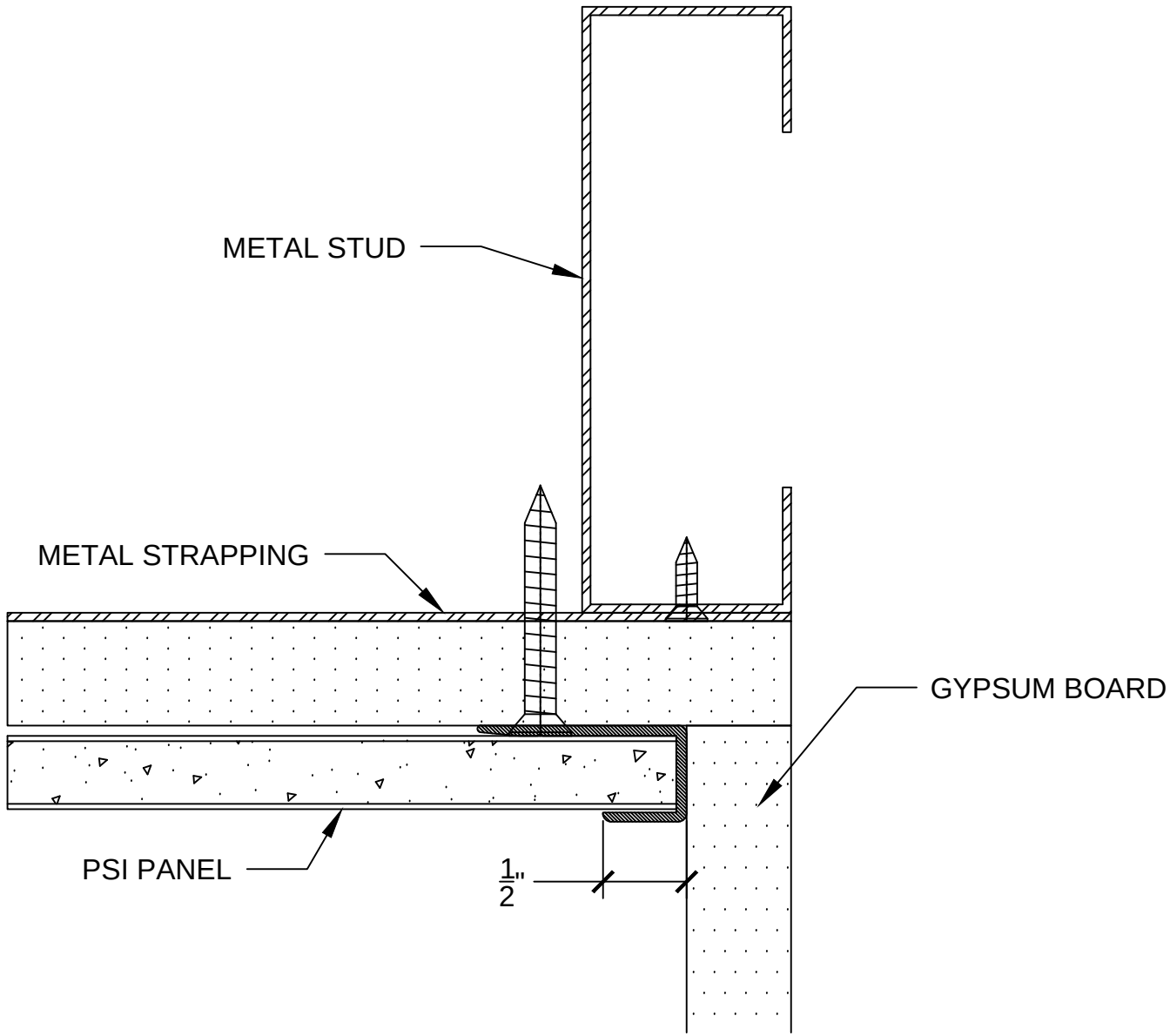

#304 INSIDE CORNER

TOP VIEW

PSI SYSTEM 312-310	PERIMETER TRIM	06

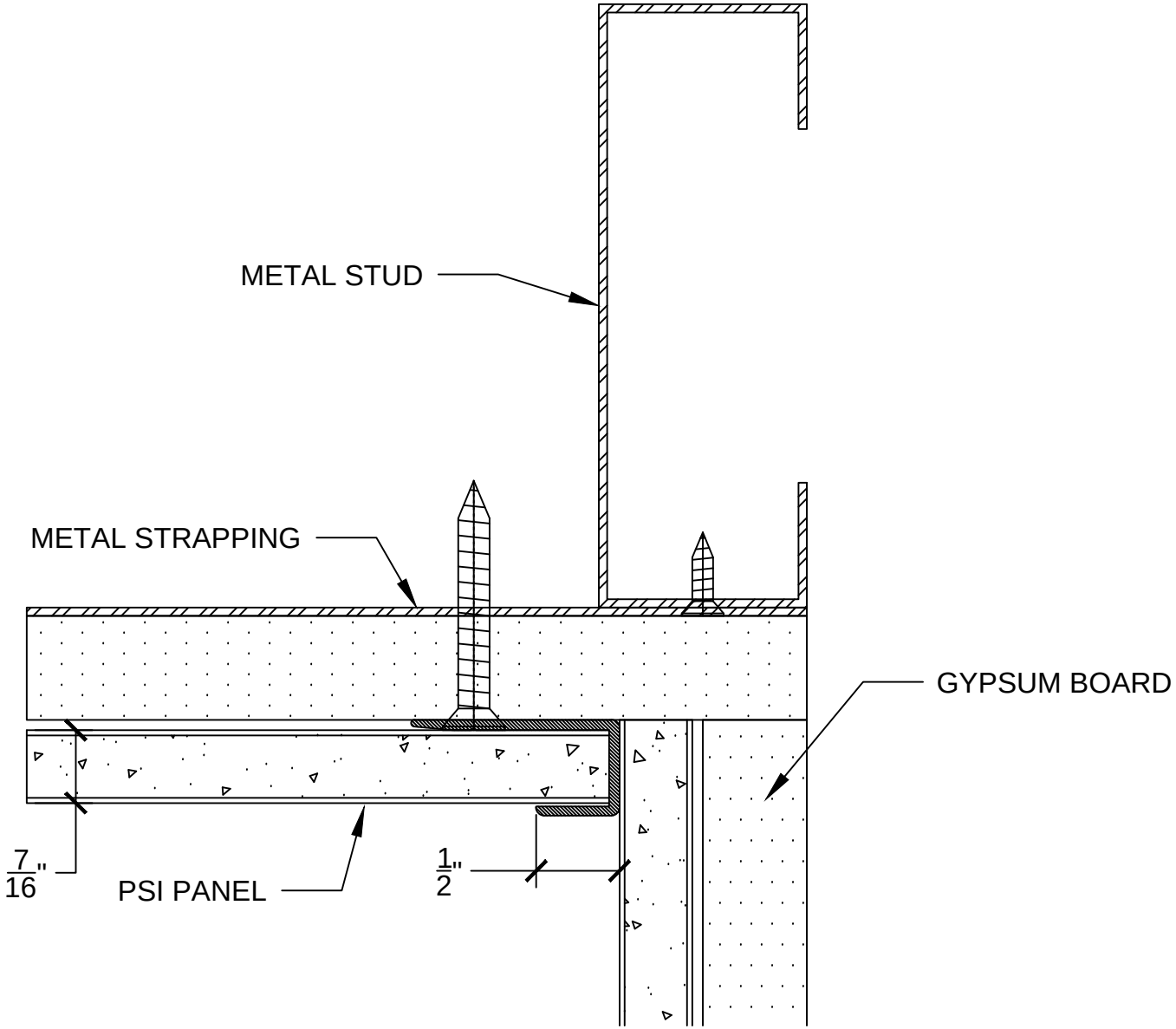

#304 INSIDE CORNER

TOP VIEW

PSI SYSTEM 312-310	PERIMETER TRIM	06

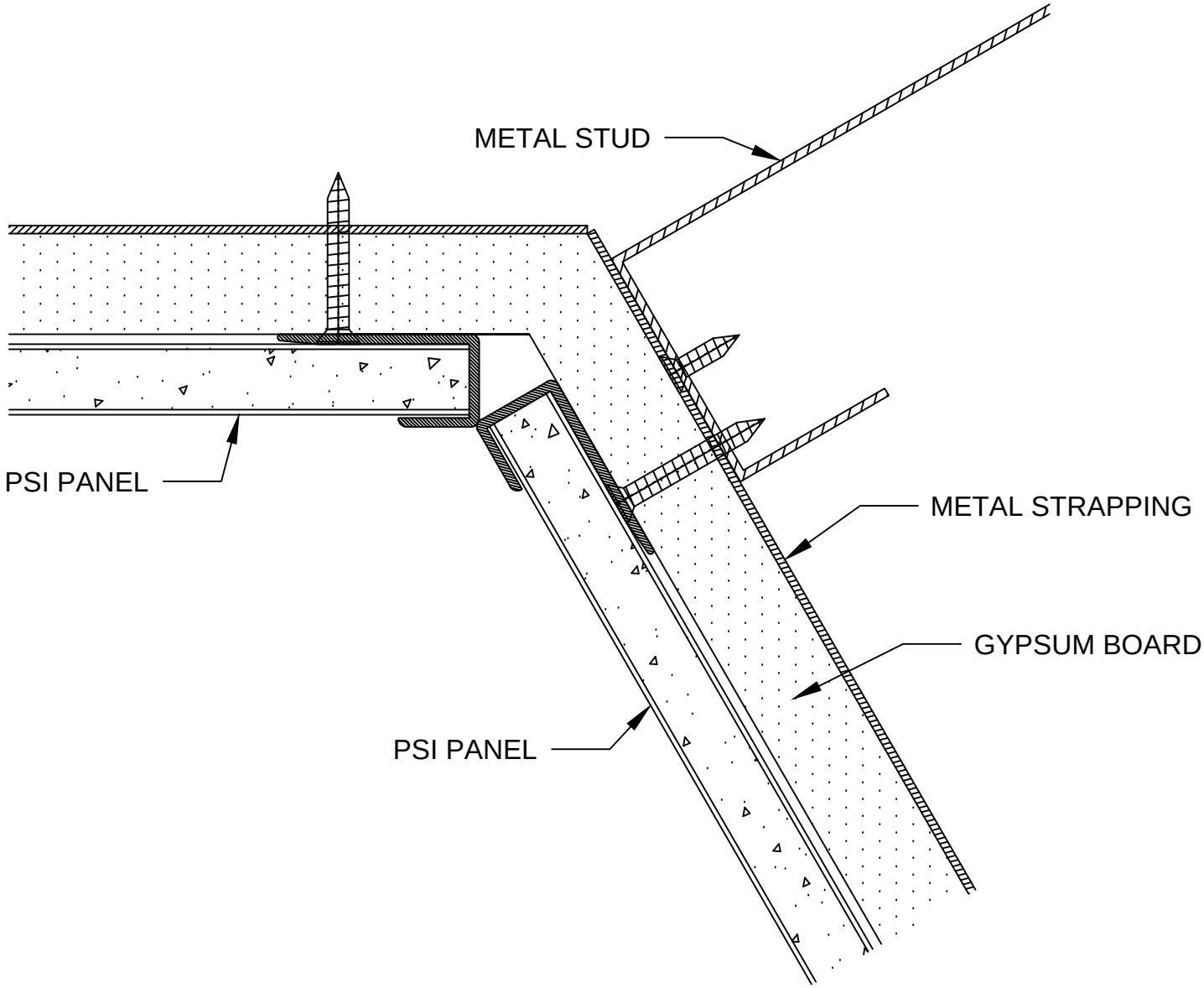

#304 ANGLED INSIDE CORNER	TOP VIEW

PSI SYSTEM 312-310	OPTIONAL PERIMETER TRIM	06

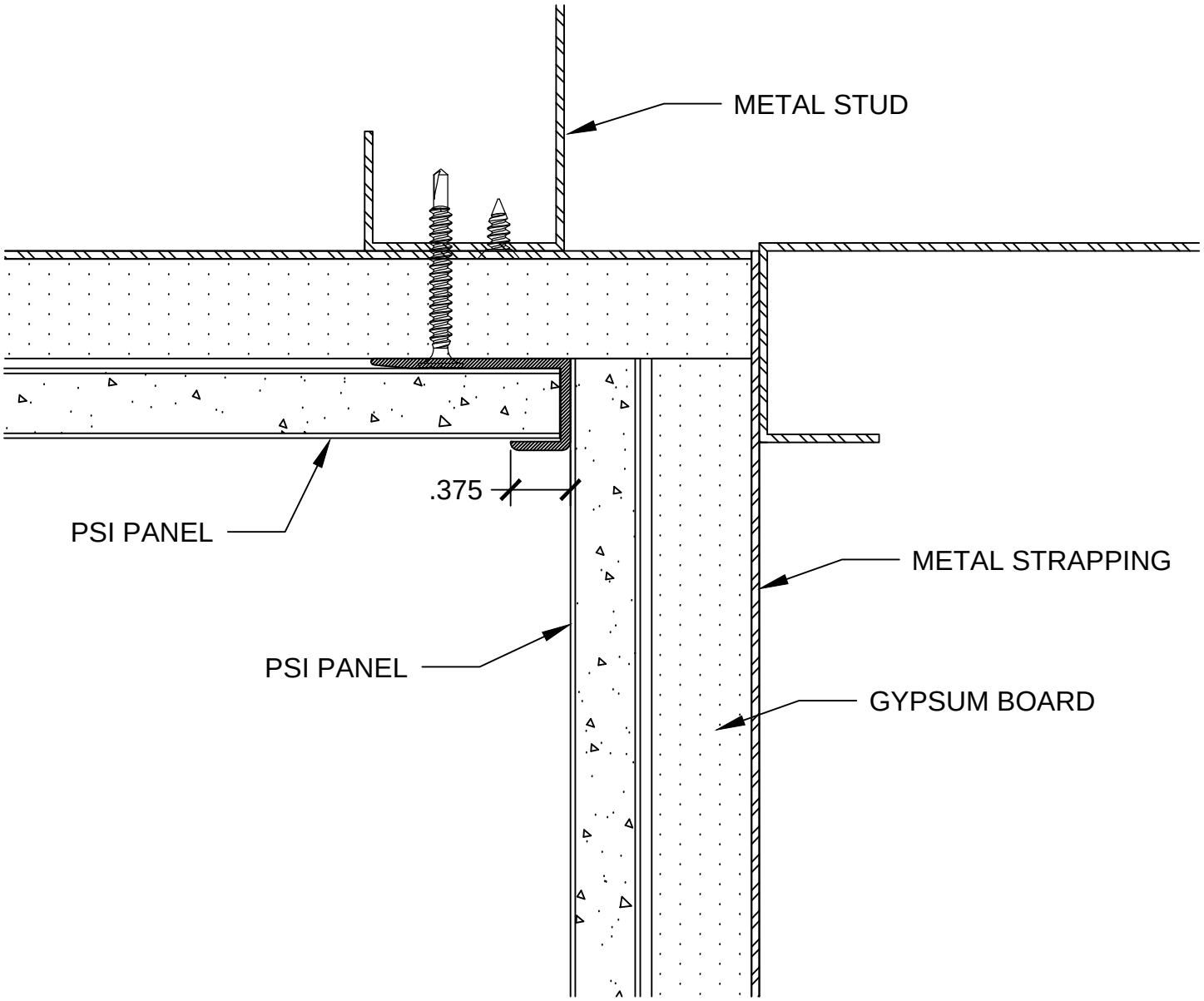

#604 INSIDE CORNER

TOP VIEW

PSI SYSTEM 312-310	OPTIONAL PERIMETER TRIM	06

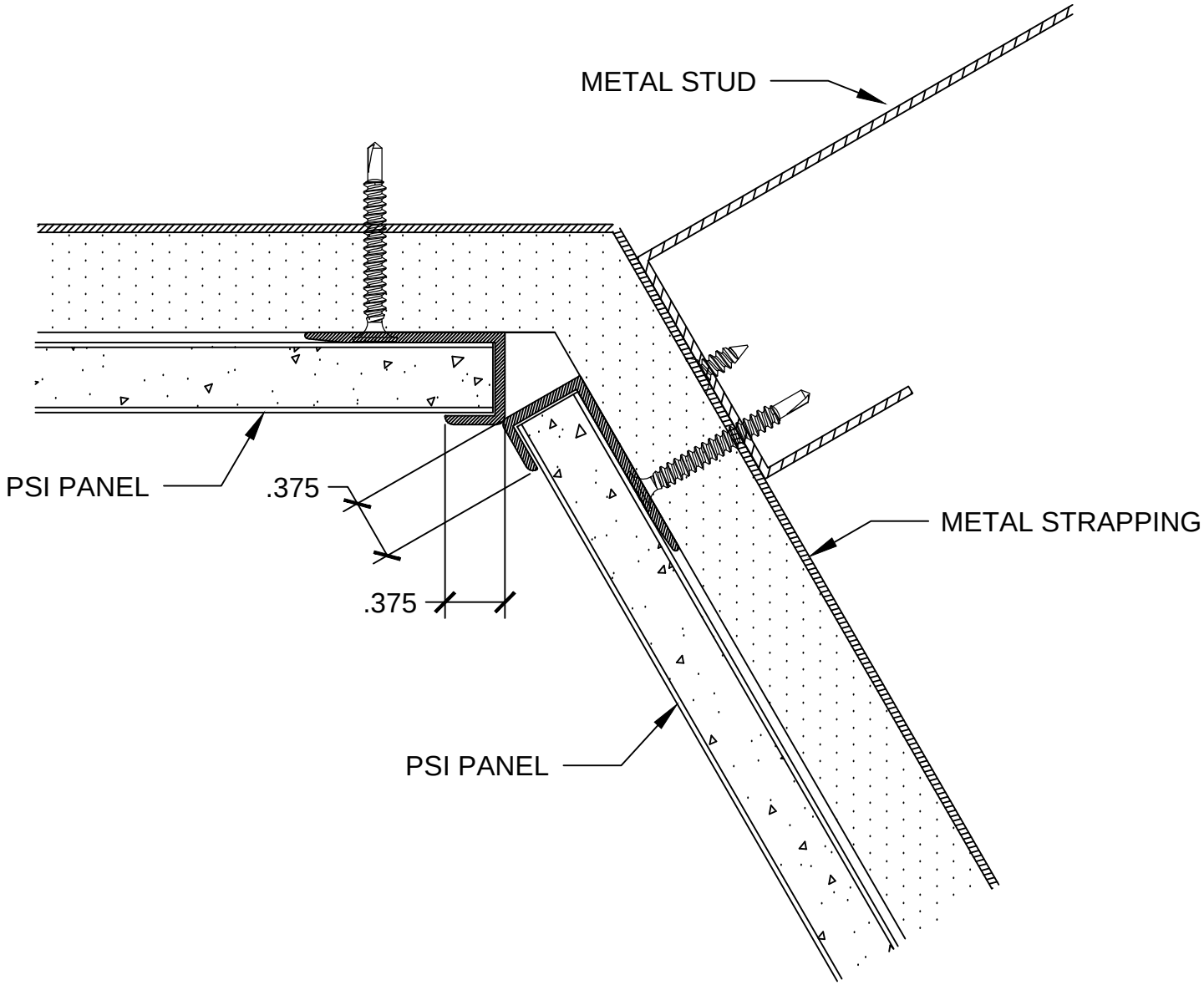

#604 ANGLED INSIDE CORNER

TOP VIEW

PSI SYSTEM 312-310	PERIMETER TRIM	07

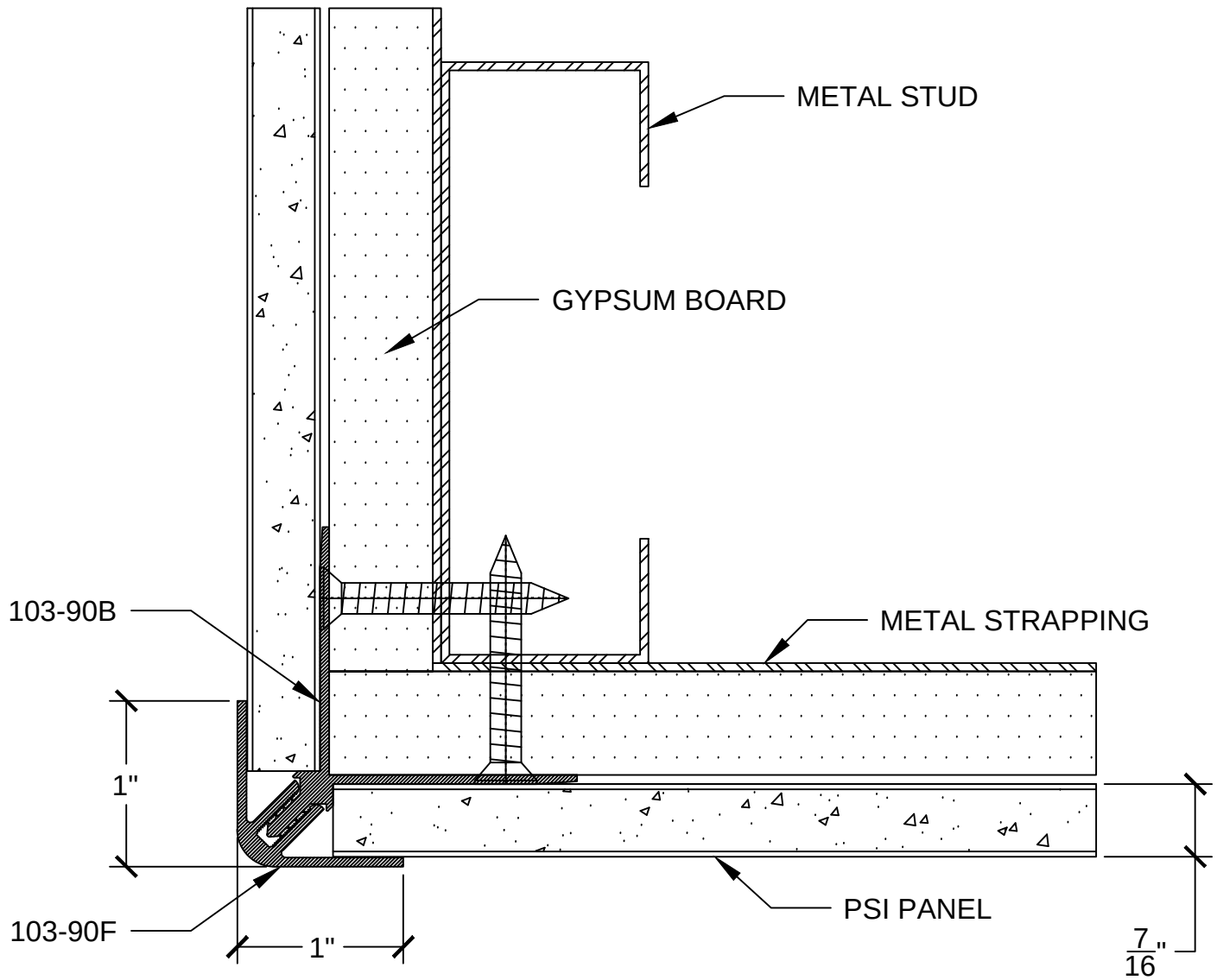

#103-90 OUTSIDE CORNER	TOP VIEW

PSI SYSTEM 312-310	PERIMETER TRIM	07

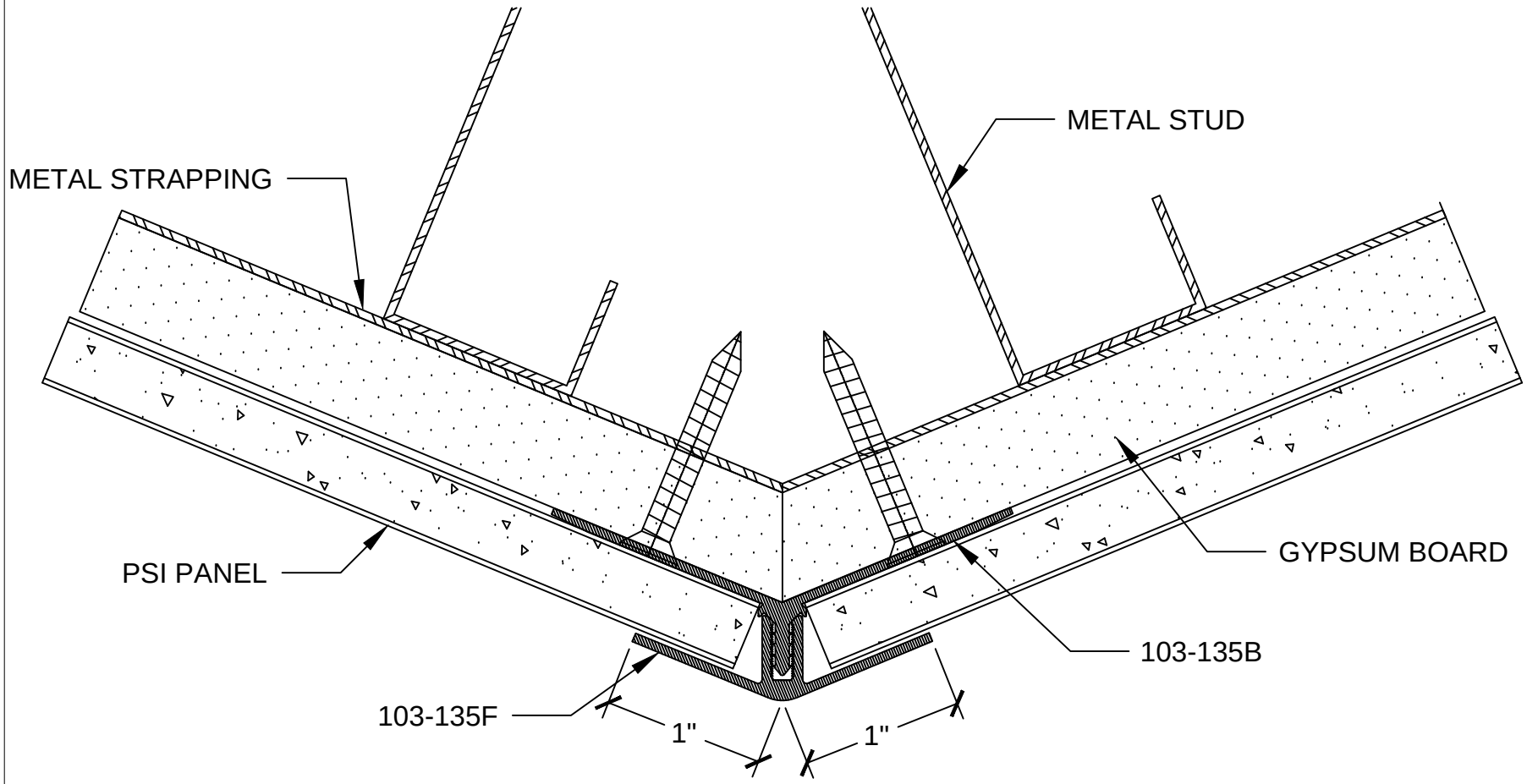

#103-135 OUTSIDE CORNER

TOP VIEW

PSI SYSTEM 312-310	OPTIONAL PERIMETER TRIM	07

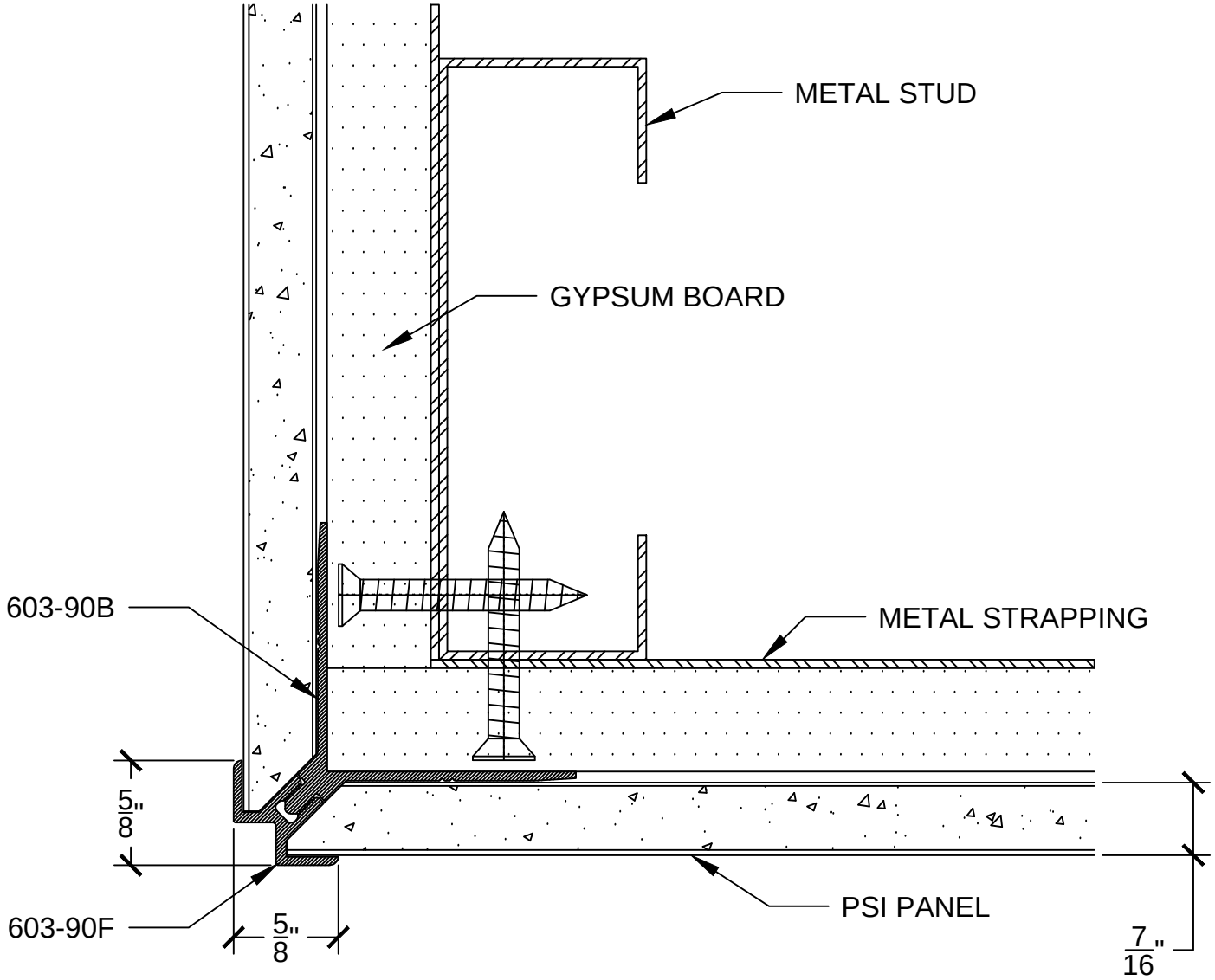

#603-90 OUTSIDE CORNER

TOP VIEW

PSI SYSTEM 312-310	OPTIONAL PERIMETER TRIM	07

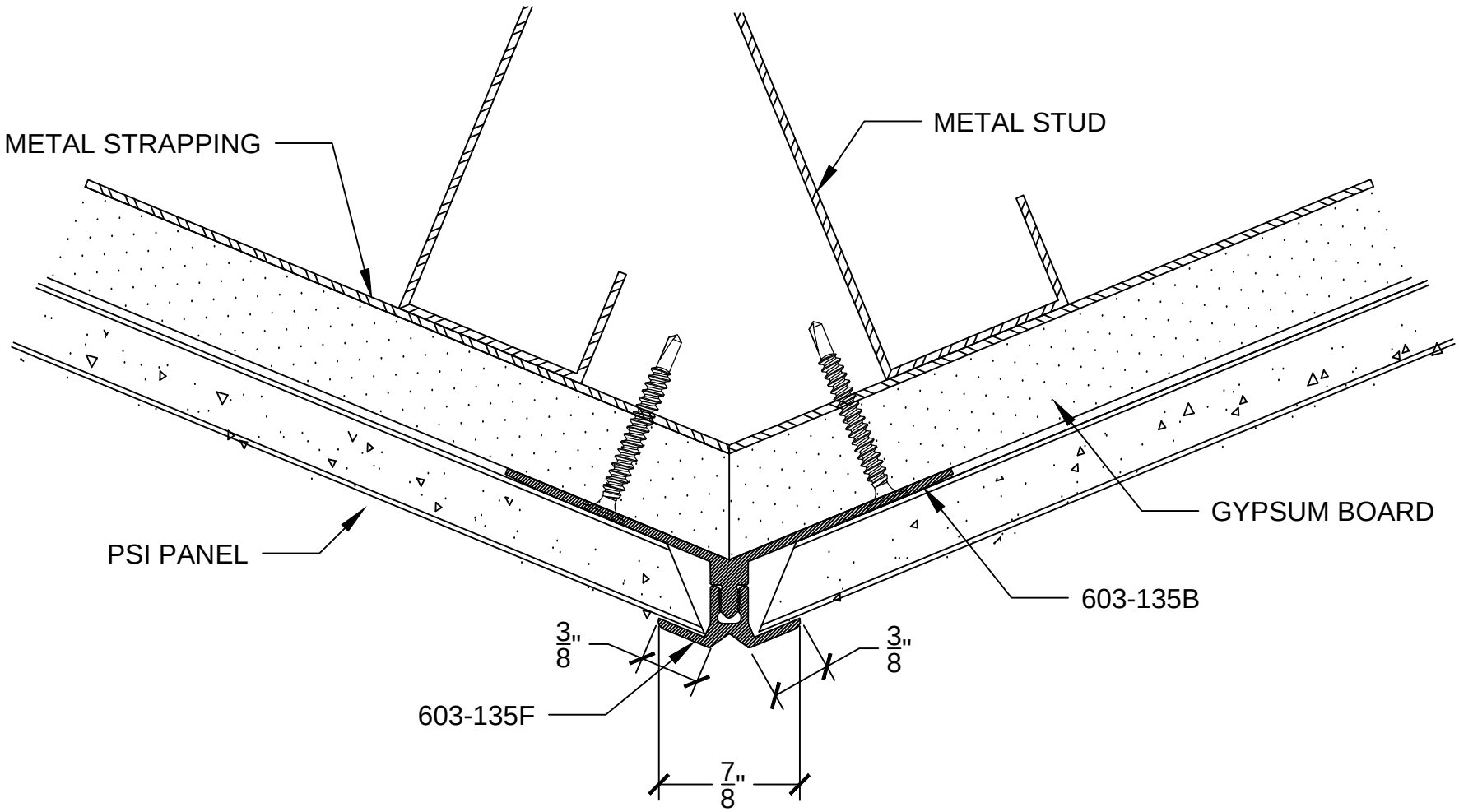

#603-135 OUTSIDE CORNER

TOP VIEW

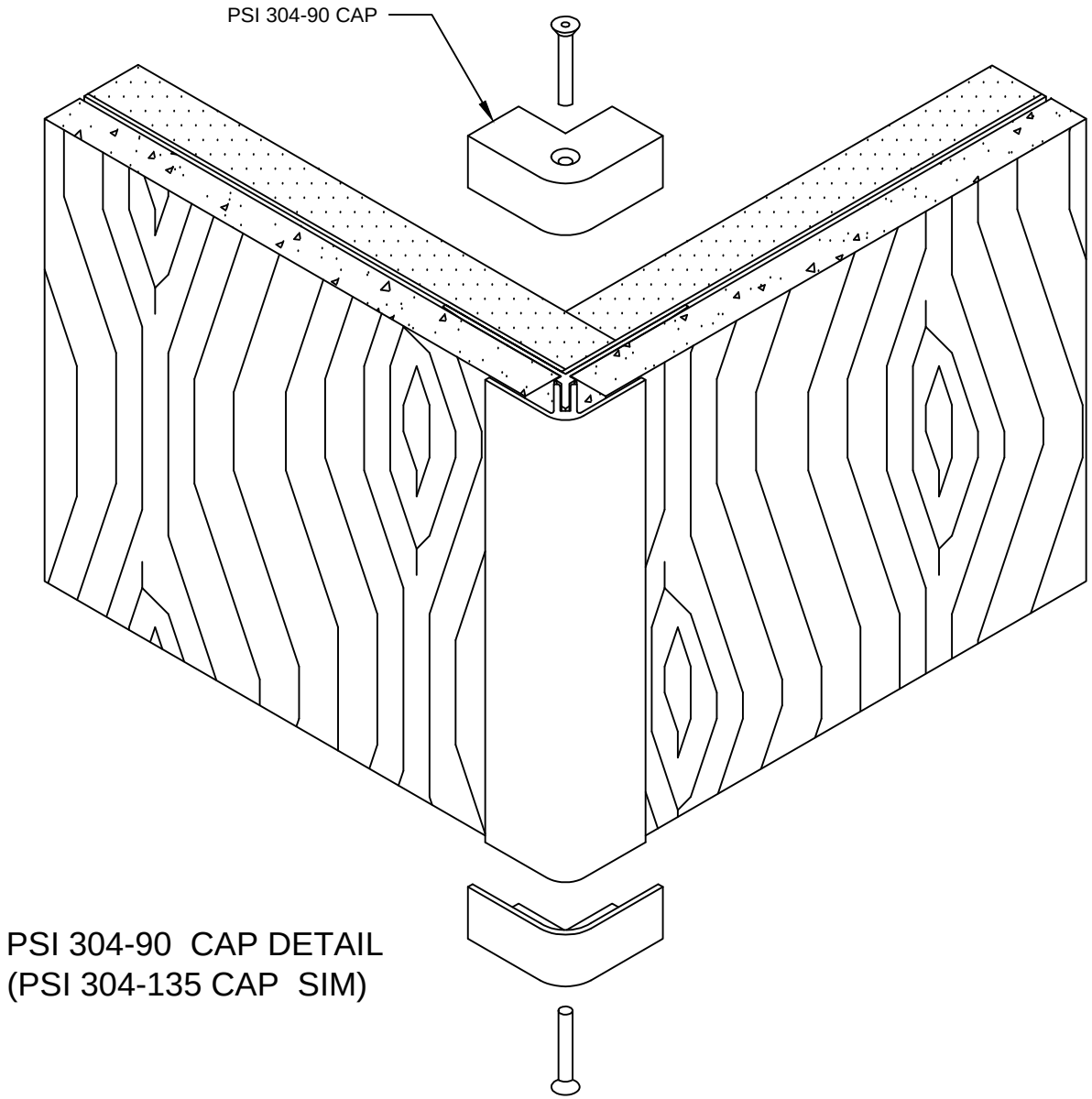

#304-90 & 304-135 CORNER CAPS

ISOMETRIC VIEW

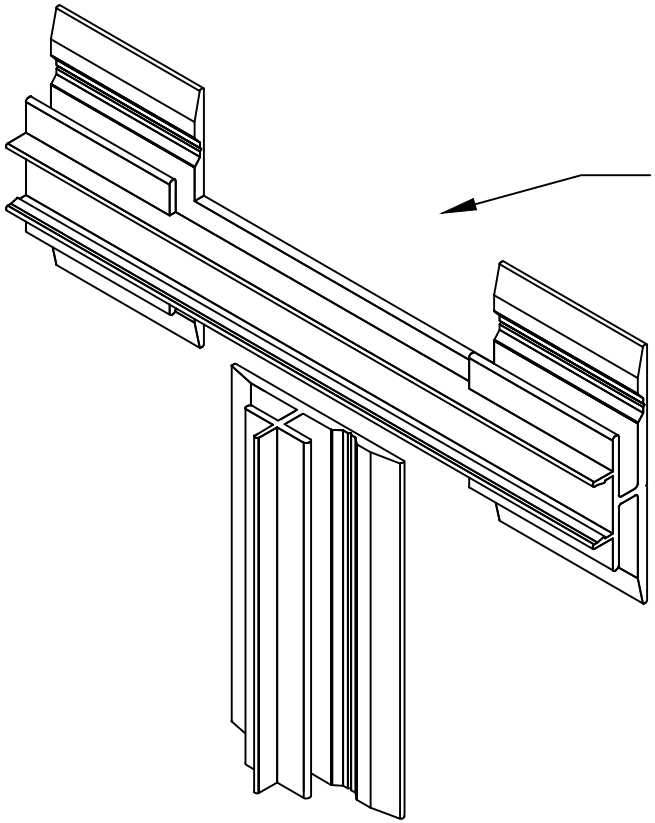

#312-310 REVEAL INTERSECTION DETAIL

ISOMETRIC VIEW

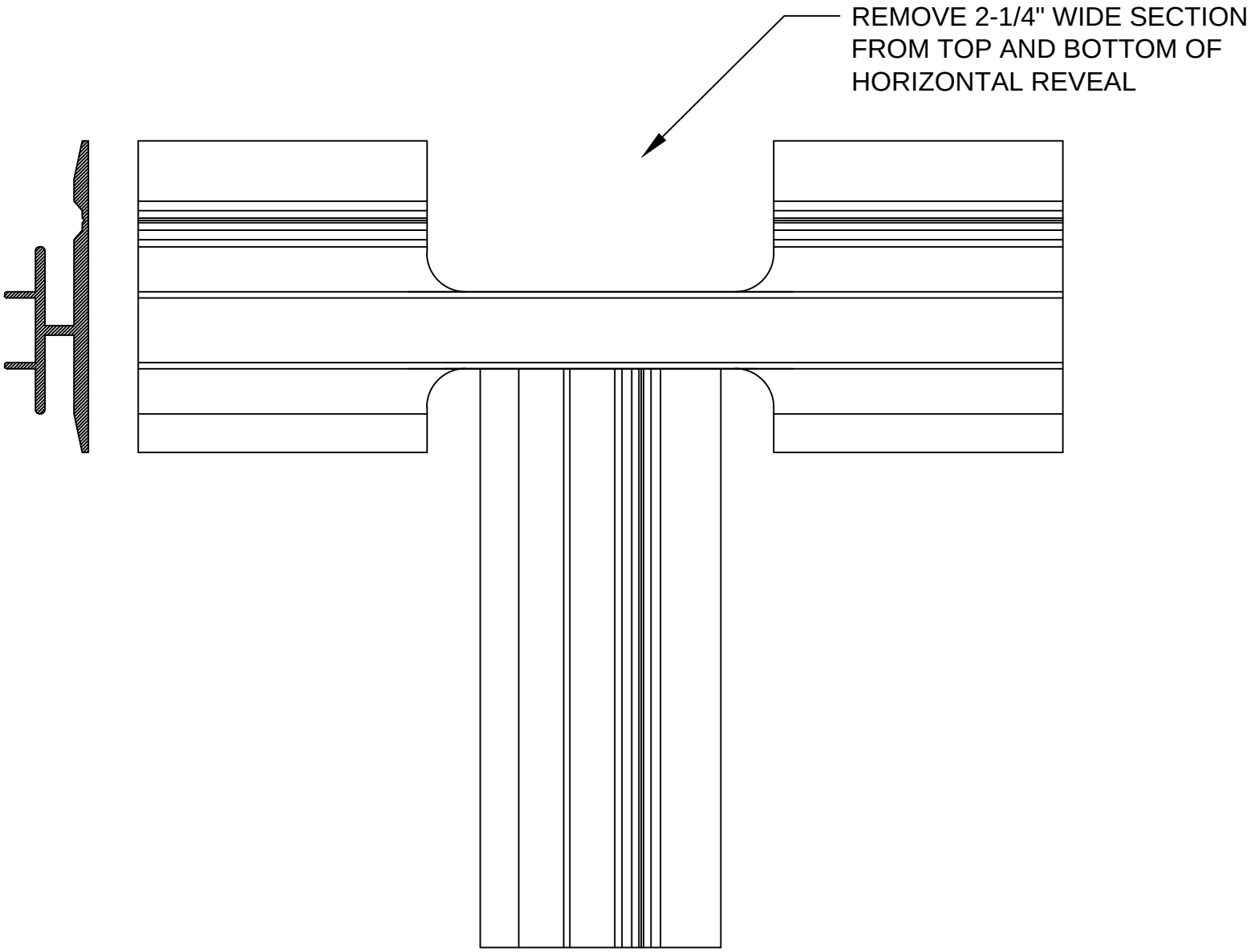

#312-310 REVEAL INTERSECTION DETAIL

ISOMETRIC VIEW

PANEL SPECIALISTS INC.
WALL PANEL SYSTEM 312-310

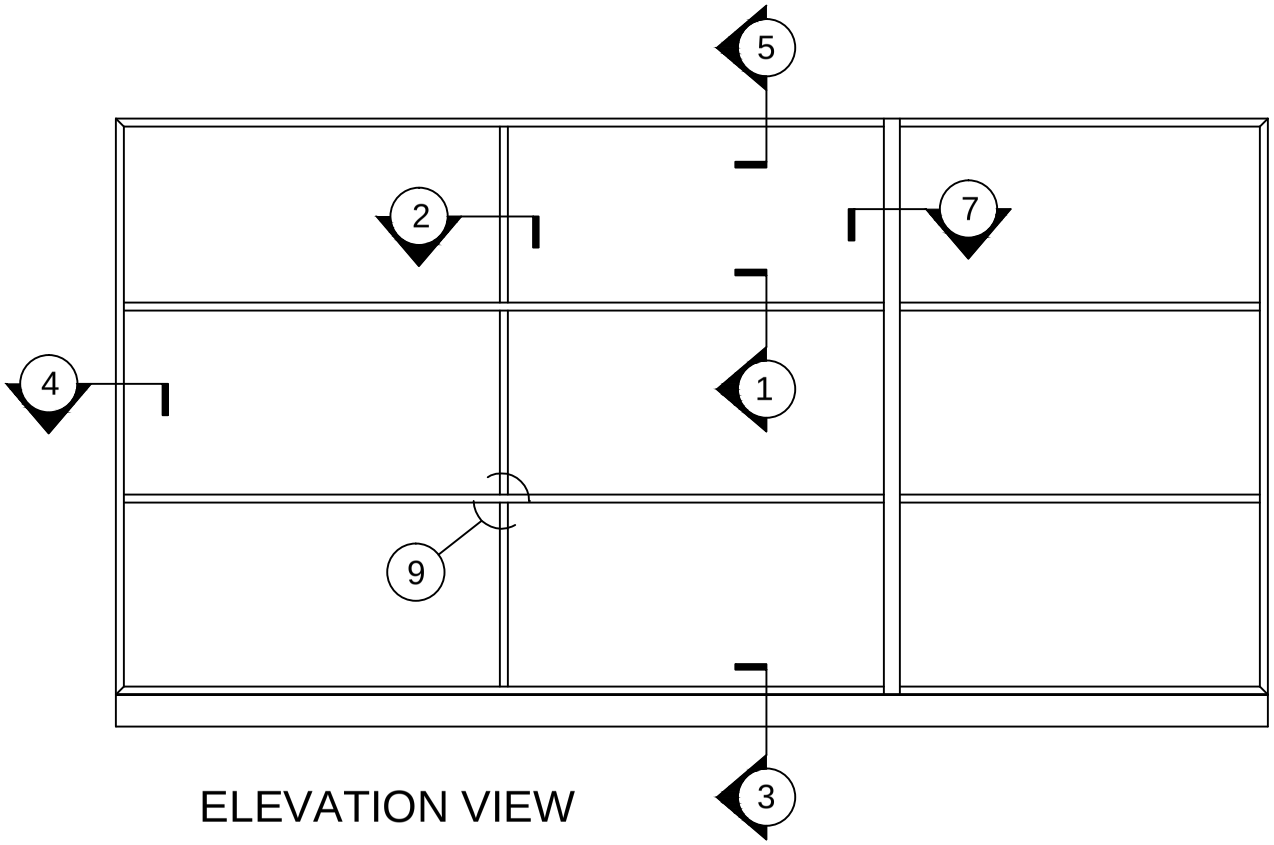

ELEVATION VIEW

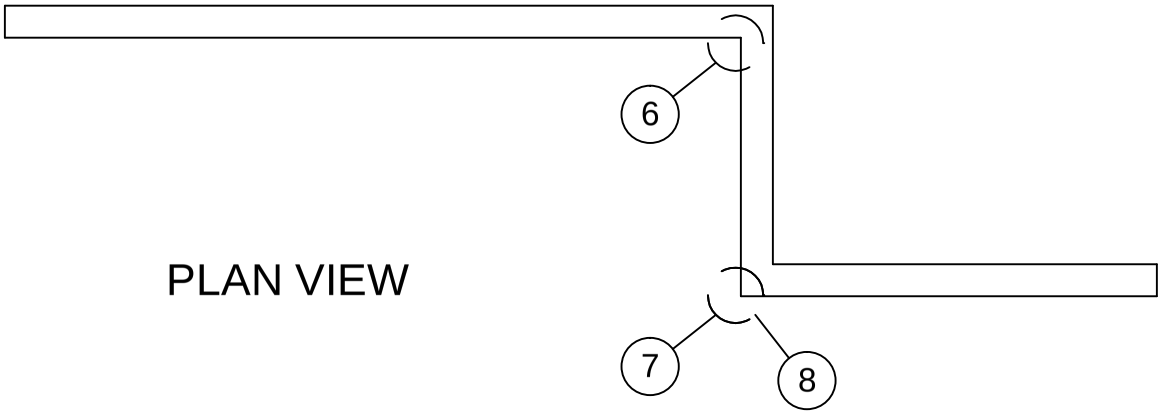

PLAN VIEW